AGENDA
City of Lucas
City Council Meeting
June 3, 2021
Executive Session – 6:00 PM
Regular Meeting - 7:00 PM
City Hall, Council Chambers and Video Conference
665 Country Club Road – Lucas, Texas

Notice is hereby given that a meeting of the Lucas City Council will be held on Thursday, June 3, 2021 beginning at 6:00 pm with Executive Session, and the Regular meeting beginning 7:00 pm at Lucas City Hall, 665 Country Club Road, Lucas, Texas 75002-7651 and by video conference, at which time the following agenda will be discussed. As authorized by Section 551.071 of the Texas Government Code, the City Council may convene into closed Executive Session for the purpose of seeking confidential legal advice from the City Attorney on any item on the agenda at any time during the meeting.

On March 16, 2020 Governor Abbott suspended some provisions of the Open Meetings Act in response to the COVID-19 emergency. City Council meetings will also be available through Zoom from your computer or smartphone. To join the meeting, please click this URL:

https://zoom.us/s/95534828374?pwd=ZkJ5cTZkVWNEL3o0WFNCQXBjQ0RvZz09 and enter your name and email address.
To join by phone: 1-346-248-7799
Webinar ID: 955 3482 8374
Passcode: 712285

If you would like to watch the meeting live, and not participate via Zoom, you may go to the City's live streaming link at https://www.lucastexas.us/live-streaming-videos/.

How to Provide Input at a Meeting:

Speak In Person: Request to Speak forms will be available at the meeting. Please fill out the form and give to the City Secretary prior to the start of the meeting. This form will also allow a place for comments.

Speak Remotely Via Zoom: If you would like to attend a meeting remotely and speak via Zoom, email the City Secretary at shenderson@lucastexas.us by 5:00 pm noting the item you wish to speak on and noting your attendance will be remote. Any requests received after 5:00 pm will not be included at the meeting.

Submit Written Comments: If you are unable to attend a meeting and would like to submit written comments regarding a specific agenda item, email the City Secretary at shenderson@lucastexas.us by no later than 5:00 pm the day of the meeting. The email must contain the person's name, address, phone number, and the agenda item(s) for which comments will be made. Any requests received after 5:00 pm will not be included at the meeting.

Executive Agenda – 6:00 pm

1. The City Council will convene into Executive Session as permitted under Texas Government Code, Section 551.074, Personnel Matters, to conduct interviews of Board of Adjustment applicants and discuss Board of Adjustment appointments.

2. Reconvene from Executive Session and take any action necessary as a result of the Executive Session.

Regular Meeting Agenda – 7:00 pm

Citizen Input

3. Citizen Input

Community Interest

Pursuant to Section 5510415 of the Texas Government Code, the City Council may report on the following items: 1) expression of thanks, congratulations or condolences; 2) information about holiday schedules; 3) recognition of individuals; 4) reminders about upcoming City Council events; 5) information about community events; and 6) announcements involving imminent threat to public health and safety.

4. Items of Community Interest

Consent Agenda

All items listed under the consent agenda are considered routine and are recommended to the City Council for a single vote approval. If discussion is desired, an item may be removed from the consent agenda for a separate vote.

5. Consent Agenda:

   A. Approval of the minutes of the May 20, 2021 City Council meeting. **(City Secretary Stacy Henderson)**

   B. Approval of Ordinance 2021-06-00931 of the City of Lucas finding that the settlement agreement between the City and CoServ Gas, Ltd. is reasonable; ordering CoServ Gas, Ltd. to implement the rates agreed to in the settlement agreement; requiring reimbursement of Cities' rate case expenses; finding that the meeting at which this ordinance is passed is open to the public as required by law; requiring notice of this ordinance to the company and legal counsel. **(City Manager Joni Clarke)**

Public Hearing

6. Public hearing to consider adopting Ordinance 2021-06-00933 approving the request by Tractor Supply for a specific use permit to allow outside storage on a 5.56-acre part of a tract of land in the William Snider Survey, Abstract Number 821, Tract 16 situated in the City of Lucas, Collin County, Texas, located at 495 South Angel Parkway. **(Development Services Director Joe Hilbourn)**

   A. Presentation by Development Services Director Joe Hilbourn
   B. Conduct public hearing
   C. Take action on the specific use permit request

Regular Agenda

7. Consider the request by Stephen DiNapoli for preliminary plat approval for a parcel of land, being 41.512 acres, part of the John Thompson Survey, Abstract 893 and the G. Ducase Survey, Abstract 270 located on the northeast side of Winningkoff Road and north of Christian Lane, located at 950 Winningkoff Road, 970 Winningkoff Road, and 905 Christian Lane. **(Development Services Director Joe Hilbourn)**

8. Consider approval of the Water Rescue Plan submitted by Lucas Fire-Rescue to develop a swift water and lake emergency response program. **(Assistant Fire Chief/Emergency Management Coordinator Lance Gant)**

9. Consider legislative bills that passed in the 87th Legislative session and provide direction to City Staff and City Attorney if needed. **(City Attorney Joe Gorfida)**

10. Consider the appointment of Mayor Pro Tem to serve for a one-year period beginning June 3, 2021 and ending May 31, 2022. **(City Council)**

11. Review the City's submittal procedures and approval requirements relating to the platting process and provide direction to staff on any recommended amendments. **(Councilmember Debbie Fisher)**

12. Adjournment.

Certification

I do hereby certify that the above notice was posted in accordance with the Texas Open Meetings Act on the bulletin board at Lucas City Hall, 665 Country Club Road, Lucas, TX 75002 and on the City's website at www.lucastexas.us on or before 5:00 p.m. on May 28, 2021.

_____

Stacy Henderson, City Secretary

In compliance with the American with Disabilities Act, the City of Lucas will provide for reasonable accommodations for persons attending public meetings at City Hall. Requests for accommodations or interpretive services should be directed to City Secretary Stacy Henderson at 972.912.1211 or by email at shenderson@lucastexas.us at least 48 hours prior to the meeting.

Item No. 01

City of Lucas
City Council Agenda Request
June 3, 2021

Requestor: Mayor Jim Olk

Agenda Item Request

Executive Session.

The City Council will convene into Executive Session as permitted under Texas Government Code, Section 551.074, Personnel Matters, to conduct interviews of Board of Adjustment applicants and discuss Board of Adjustment appointments.

Background Information

NA

Attachments/Supporting Documentation

NA

Budget/Financial Impact

NA

Recommendation

NA

Motion

NA

City of Lucas
City Council Agenda Request
June 3, 2021

Item No. 02

Requester: Mayor Jim Olk

Agenda Item Request

Reconvene from Executive Session and take any action necessary as a result of the Executive Session.

Background Information

NA

Attachments/Supporting Documentation

NA

Budget/Financial Impact

NA

Recommendation

NA

Motion

NA

Item No. 03

City of Lucas
City Council Agenda Request
June 3, 2021

Requester: Mayor Jim Olk

Agenda Item Request

Citizen Input

Background Information

NA

Attachments/Supporting Documentation

NA

Budget/Financial Impact

NA

Recommendation

NA

Motion

NA

Item No. 04

City of Lucas
City Council Agenda Request
June 3, 2021

Requester: Mayor Jim Olk

Agenda Item Request

Items of Community Interest

Background Information

NA

Attachments/Supporting Documentation

NA

Budget/Financial Impact

NA

Recommendation

NA

Motion

NA

Item No. 05

City of Lucas
City Council Agenda Request
June 3, 2021

Requester: City Secretary Stacy Henderson
City Attorney Joe Gorfida

Agenda Item Request

Consent Agenda:

A. Approval of the minutes of the May 20, 2021 City Council meeting.

B. Approval of Ordinance 2021-06-00931 of the City of Lucas finding that the settlement agreement between the City and CoServ Gas, Ltd. is reasonable; ordering CoServ Gas, Ltd. to implement the rates agreed to in the settlement agreement; requiring reimbursement of Cities' rate case expenses; finding that the meeting at which this ordinance is passed is open to the public as required by law; requiring notice of this ordinance to the company and legal counsel.

Background Information

Agenda Item B:

On or about May 14, 2021, a Settlement Agreement was reached between the CoServ Gas Cities and the Company. The Settlement Agreement reduces the Company's requested rate increase of $11.5 million down to $6.25 million representing a 45.6% reduction to the Company's request. Additionally, the Settlement Agreement provides for a 9.5% return on equity rather than the Company's requested 11.5% return on equity. Finally, the Settlement Agreement provides for a customer charge of $15, compared to the Company's original $18.50 request. The commercial and public authority customer charge will be $35, versus the Company's original $43.50 request. The Company has agreed to 100% recovery of City's rate case expenses.

The purpose of the ordinance is to approve the Settlement Agreement and direct the Company to implement the rates in the Settlement Agreement. Additionally, pursuant to GURA § 103.022, cities are entitled to reimbursement of the expenses associated with the rate case to the extent the expenses are reasonable.

Attachments/Supporting Documentation

1. Minutes of the May 20, 2021 City Council meeting.
2. Ordinance 2021-06-00931 CoServ Settlement
3. Model Staff Report

Budget/Financial Impact

NA

Item No. 05

City of Lucas
City Council Agenda Request
June 3, 2021

Recommendation

City Staff recommends approval of the Consent Agenda.

Motion

I make a motion to approve/deny the Consent Agenda as presented.

City of Lucas
City Council Meeting
May 20, 2021
City Hall Council Chambers and by Video Conference
7:00 P.M.
City Hall, 665 Country Club Road, Lucas, Texas

MINUTES

City Councilmembers Present:
Mayor Jim Olk
Mayor Pro Tem Kathleen Peele
Councilmember Tim Johnson
Councilmember Tim Baney
Councilmember David Keer
Councilmember Phil Lawrence
Councilmember Debbie Fisher
Councilmember Phil Lawrence *(joined the meeting at 7:09 pm)*

City Staff Present:
City Manager Joni Clarke
City Secretary Stacy Henderson
Development Services Director Joe Hilbourn

Mayor Olk called the meeting to order at 7:01 pm.

Citizen Input

1. Citizen Input

There was no citizen input at this meeting.

Community Interest

2. Community Interest.

Mayor Olk discussed upcoming events related to the Farmers Market and Movie in the Park.

Mayor Pro Tem Peele noted the upcoming TTPA Tack Sale on June 5, 2021 from 9 am to 2pm at Brockdale Trailhead.

Consent Agenda

3. Consent Agenda:

A. Approval of the minutes of the May 6, 2021 City Council meeting.

B. Authorize the Mayor to enter into an interlocal agreement between the City of Lucas and Collin County for jail services for a one-year period beginning October 1, 2021 through September 30, 2022.

MOTION: A motion was made by Councilmember Fisher, seconded by Mayor Pro Tem Peele to approve the Consent Agenda as presented. The motion passed unanimously by a 7 to 0 vote.

Regular Agenda

4. Consider an appointment to fill an unexpired vacant position on the Planning and Zoning Commission with a term ending December 31, 2021.

The City Council moved this item after Agenda Item No. 6.

5. Consider pending legislation that is brought before the 87th Legislature, provide direction to City Staff and City Attorney, or take action regarding any proposed legislation.

Mayor Olk noted the City Attorney was not present at this meeting and would provide an update at the next City Council meeting.

6. Discuss the City of Lucas Code Enforcement Program.

The City Council discussed sign clutter occurring on weekends, current enforcement related to signage, and enforcement related to home-based businesses. The Council also discussed high grass enforcement during rainy periods, and enforcement related to tree limbs and brush in the right of way areas.

Development Services Director Joe Hilbourn discussed current procedures related to signage, weekend inspections, and code enforcement procedures.

The City Council was in agreement to maintain existing code enforcement procedures in place and would revisit at a future date if needed.

4. Consider an appointment to fill an unexpired vacant position on the Planning and Zoning Commission with a term ending December 31, 2021.

The City Council convened into Executive Session at 7:27 pm as permitted under Texas Government Code, Section 551.071 to discuss appointments to the Planning and Zoning Commission.

The City Council reconvened from Executive Session at 8:00 pm and took the following action from Executive Session:

MOTION: A motion was made by Mayor Olk, seconded by Mayor Pro Tem Peele to promote Commissioner Adam Sussman to a regular voting member position, promote James Foster to Alternate 1, and appoint Chris Bierman as Alternate 2 to the Planning and Zoning Commission for a term ending December 31, 2021. The motion passed unanimously by a 7 to 0 vote.

Mayor Olk noted that the appointments created an opening on the Board of Adjustment and asked that an Executive Session item be placed on the June 3, 2021 City Council meeting agenda to conduct interviews for the Board of Adjustment.

7. Adjournment.

MOTION: A motion was made by Mayor Olk seconded by Councilmember Lawrence to adjourn the meeting at 8:02 pm.

APPROVED: ATTEST:

Jim Olk, Mayor Stacy Henderson, City Secretary

ORDINANCE NO. 2021-06-00931

ORDINANCE OF THE CITY OF LUCAS FINDING THAT THE SETTLEMENT AGREEMENT BETWEEN THE CITY AND COSERV GAS, LTD. IS REASONABLE; ORDERING COSERV GAS, LTD. TO IMPLEMENT THE RATES AGREED TO IN THE SETTLEMENT AGREEMENT; REQUIRING REIMBURSEMENT OF CITIES' RATE CASE EXPENSES; FINDING THAT THE MEETING AT WHICH THIS ORDINANCE IS PASSED IS OPEN TO THE PUBLIC AS REQUIRED BY LAW; REQUIRING NOTICE OF THIS ORDINANCE TO THE COMPANY AND LEGAL COUNSEL

WHEREAS, on or about November 13, 2020, CoServ Gas, Ltd. ("CoServ" or "Company"), pursuant to Gas Utility Regulatory Act ("GURA") § 104.102 filed a Statement of Intent to Increase Rates with the Railroad Commission of Texas (the "Commission") within the unincorporated areas it serves in the State of Texas and filed with the City of Lucas a Statement of Intent to change gas rates in all municipalities exercising original jurisdiction within the Company's service area, effective January 23, 2021; and

WHEREAS, the Company agreed to extend the proposed effective date to March 14, 2021; and

WHEREAS, the City of Lucas has exclusive original jurisdiction over the rates, operations, and services of a gas utility within the municipality, pursuant to GURA § 103.001; and

WHEREAS, GURA § 103.021 grants a municipality authority to require a utility to submit information as necessary to make a reasonable determination of rate base, expenses, investment, and rate of return in the municipality; and

WHEREAS, the City of Lucas suspended the effective date of the proposed rate change for ninety (90) days pursuant to GURA § 104.107; and

WHEREAS, the City of Lucas joined with other similarly situated cities, the Steering Committee of Cities Served by CoServ Gas, Ltd. ("CoServ Gas Cities"), to conduct a review of the Company's application by hiring and directing legal counsel and consultants to prepare a common response and to negotiate with the Company and direct any necessary litigation; and

WHEREAS, on or about May 14, 2021, the CoServ Gas Cities reached a Settlement Agreement resolving all issues relating to the Company's Statement of Intent to Increase Rates; and

WHEREAS, the CoServ Gas Cities members and attorneys recommend that the City of Lucas approve this settlement agreement setting rates; and

WHEREAS, GURA § 103.022 provides that reasonable costs incurred by cities in ratemaking activities are to be reimbursed by the regulated utility.

THEREFORE, BE IT ORDAINED BY THE CITY COUNCIL OF THE CITY OF LUCAS, TEXAS:

Section 1. That the City approves the Settlement Agreement reached between the CoServ Gas Cities and the Company and directs the Company to implement the rates indicated in the Settlement Agreement.

Section 2. That the City's reasonable rate case expenses shall be reimbursed by the Company.

Section 3. That it is hereby officially found and determined that the meeting at which this Ordinance is passed is open to the public as required by law and the public notice of the time, place, and purpose of said meeting was given as required.

Section 4. A copy of this Ordinance shall be sent to CoServ, care of Charles Harrell, CoServ Gas, Ltd. 7701 South Stemmons Freeway, Corinth, Texas 76210 (CHarrell@coserv.com), and to Thomas Brocato at Lloyd Gosselink Rochelle & Townsend, P.C., 816 Congress Avenue, Suite 1900, Austin, Texas 78701 (tbrocato@lglawfirm.com).

PASSED AND APPROVED this 3rd day of June 2021.

_____
Mayor Jim Olk, City of Lucas

ATTEST:

_____
City Secretary Stacy Henderson

APPROVED AS TO FORM:

_____
City Attorney Joe Gorfida

STAFF REPORT REGARDING THE ORDINANCE

APPROVING SETTLEMENT AGREEMENT FOR COSERV GAS LTD.

On or about November 13, 2020, CoServ Gas, Ltd. ("CoServ" or "Company") filed to increase rates in all cities with exclusive original jurisdiction over the rates, operations, and services within its service area. In its application, CoServ sought to increase base rates by 11.8% for its entire service area.

The City, pursuant to § 104.102 of the Gas Utility Regulatory Act ("GURA"), has exclusive original jurisdiction over the gas rates charged by the Company. Although, CoServ proposed an original effective date of January 23, 2021, the Company agreed to extend the proposed effective date to March 14, 2021, with a statutory deadline of August 10, 2021. The City suspended the effective date for 90 days, giving the City until June 12, 2021 to evaluate the application and take final action. The City joined with the other cities (collectively the "CoServ Gas Cities") to conduct a review of the Company's application by hiring and directing legal counsel and consultants to prepare a common response and negotiate with the Company.

On or about May 14, 2021, a Settlement Agreement was reached between the CoServ Gas Cities and the Company. The Settlement Agreement reduces the Company's requested rate increase of $11.5 million down to $6.25 million representing a 45.6% reduction to the Company's request. Additionally, the Settlement Agreement provides for a 9.5% return on equity rather than the Company's requested 11.5% return on equity. Finally, the Settlement Agreement provides for a customer charge of $15, compared to the Company's original $18.50 request. The commercial and public authority customer charge will be $35, versus the Company's original $43.50 request. The Company has agreed to 100% recovery of City's rate case expenses.

Purpose of the Ordinance:

The purpose of the ordinance is to approve the Settlement Agreement and direct the Company to implement the rates in the Settlement Agreement. Additionally, pursuant to GURA § 103.022, cities are entitled to reimbursement of the expenses associated with the rate case to the extent the expenses are reasonable.

Explanation of "Be It Ordained Paragraphs"

Section 1. This provision approves the Settlement Agreement reached between the CoServ Gas Cities and sets rates at the levels indicated in the Settlement Agreement.

Section 2. This section directs the Company to reimburse the City's reasonable rate case expenses.

Section 3. This section merely recites that the ordinance was passed at a meeting that was open to the public and that the consideration of the ordinance was properly noticed.

Section 4. This section provides that the Company and counsel for the city group will be notified of the City's action by sending a copy of the approved and signed ordinance to the Company and to counsel for the city group.

Recommendation

The City Staff recommends adoption of the ordinance approving the Settlement Agreement, setting rates at the level indicated in the Settlement Agreement, and directing the Company to reimburse the City's reasonable rate case expenses.

City of Lucas
City Council Agenda Request
June 3, 2021

Item No. 06

Requester: Development Services Director Joe Hilbourn

Agenda Item Request

Public hearing to consider adopting Ordinance 2021-06-00933 approving the request by Tractor Supply for a specific use permit to allow outside storage on a 5.56-acre part of a tract of land in the William Snider Survey, Abstract Number 821, Tract 16 situated in the City of Lucas, Collin County, Texas, located at 495 South Angel Parkway.

A. Presentation by Development Services Director Joe Hilbourn
B. Conduct public hearing
C. Take action on the specific use permit request

Background Information

Tractor Supply is building a 21,930 square foot retail space with an area for outdoor storage. The site is currently zoned Commercial Business. Section 14.03.353 of the City's Code of Ordinances states that businesses with outside storage and/or display of any type shall be allowed only upon the approval of a specific use permit. In order for Tractor Supply to have outside storage a specific use permit must be approved granting this right.

Attachments/Supporting Documentation

1. Public notice
2. Photometric Plan
3. Elevations
4. Landscape plan
5. Site Plan
6. Ordinance 2021-06-00933

Budget/Financial Impact

NA

Recommendation

Staff recommends approving the specific use permit. The Planning and Zoning Commission recommended approval of the specific use permit unanimously with the following conditions:

1. The outside storage be contained to those two areas shown on the site plan.

2. That the screening wall, trees, and plants that are provided on the east property line be perpetually maintained to screen residential from the commercial business.
3. The site plan, landscape plan and elevations be tied to the specific use permit.

Motion

I make a motion to approve/deny Ordinance 2021-06-00933 approving the request by Tractor Supply for a specific use permit to allow outside storage on a 5.56-acre part of a tract of land in located at 495 South Angel Parkway with the following conditions:

1. The outside storage be contained to those two areas shown on the site plan.
2. That the screening wall, trees, and plants that are provided on the east property line be perpetually maintained to screen residential from the commercial business.
3. The site plan, landscape plan and elevations be tied to the specific use permit.

NOTICE OF PUBLIC HEARING

NOTICE IS HEREBY GIVEN, that the City Council of the City of Lucas, Texas will conduct a public hearing on Thursday, June 3, 2021 at 7:00 p.m. at Lucas City Hall, 665 Country Club, Lucas, Texas to consider a Specific Use Permit (SUP) application by Tractor Supply to allow outdoor storage located at the northeast quadrant of FM 2551 and West Lucas Road (north of Home Run Alley) more commonly known as 495 South Angel Parkway. The property is zoned Commercial and more particularly described as follows:

WHEREAS, **PENNINGTON PARTNERS, LLC**, is the owner of a 5.65-acre tract out of the William Snider Survey, Abstract Number 821, situated in the City of Lucas, Collin County, Texas, being a part of a called 21.751-acre tract conveyed by Warranty Deed with Vendor's Lien of record in Document Number D20020606000809110 of the Official Public Records of Collin County, Texas, and being more particularly described by metes and bounds as follows:

BEGINNING, at a CIRS in the East line of a called 1.140-acre tract of land conveyed to O'Reilly Auto Enterprises, LLC by deed of record in Document Number 20171102001464850 of said Official Public Records, being the Northwest corner of Lot 1, Block A of Home Run Alley Addition, a subdivision of record in Document Number 20210309010000690 of the Plat Records of Collin County, Texas, and also being the Southwest corner hereof;

THENCE, N00°46'46"W, along the East line of said 1.140-acre tract, a distance of 86.99 feet to a 1/2" iron rod with plastic cap stamped “HUITT ZOLLARS” found at the Northeast corner of said 1.140-acre tract, also being the Southeast corner of Lot 1R, Block A of Lucas Plaza Addition, a subdivision of record in Document Number 20190124010000390 of said Plat Records;

THENCE, N00°54'46"W, along the East line of said Lot 1R, Block A of Lucas Plaza Addition, a distance of 186.01 feet to a ½" iron rod found at the Northeast corner of said Lot 1R, also being the Southeast corner of Lot 1, Block A of Donald Alan Addition, a subdivision of record in Document Number 20191016010004490 of said Plat Records;

THENCE, N00°44'37"W, along the East line of said Lot 1, Block A of Donald Alan Addition, a distance of 105.27 feet to a CIRS at the Northwest corner hereof;

THENCE, N89°20'40"E, over and across said 21.751-acre tract along the North line hereof, a distance of 646.97 feet to a CIRS in the West Right-of-Way line of Allison Lane, being the East line of said 21.751-acre tract, and also being the Northeast corner hereof;

THENCE, S00°38'34"E, along the West Right-of-Way line of Allison Lane, also being the East line of said 21.751-acre tract a distance of 382.61 feet to a CIRS, being the Southeast corner hereof;

THENCE, S89°43'45"W, along the North line of said Home Run Alley Addition, a distance of 645.71 feet to the **POINT OF BEGINNING** and containing an area of 5.65 Acres, or (245,902 Square Feet) of land, more or less.

Those wishing to speak for or against the above item are invited to attend. If you are unable to attend and have comments you may send them to City of Lucas, Attention: City Secretary, 665 Country Club Road, Lucas, Texas 75002, email shenderson@lucastexas.us and it will be presented at the hearing. If you have any questions about the above hearing, you may contact Joe Hilbourn at jhilbourn@lucastexas.us.

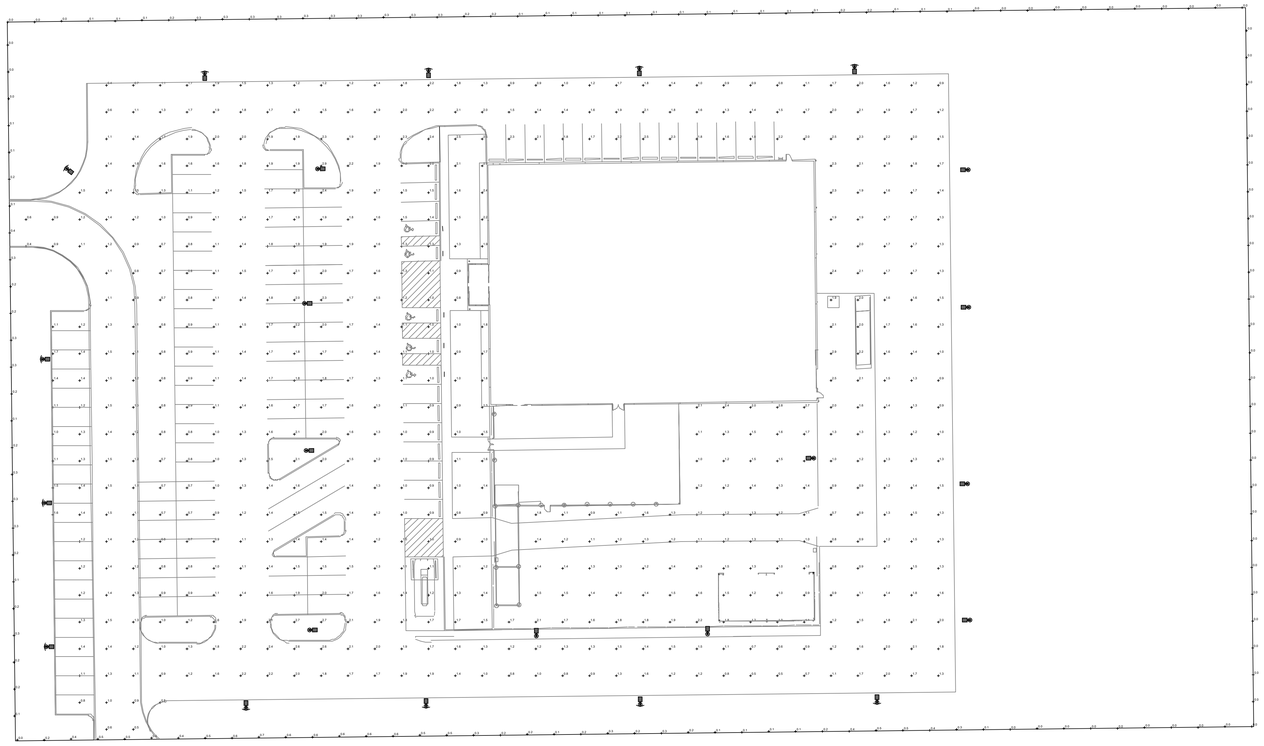

1 SITE PHOTOMETRIC PLAN

SCALE: 1/32"=1'-0"

N

STATISTICS				
DESCRIPTION	SYMBOL	AVG	MAX	MIN
PROPERTY LINE	+	0.2	0.7	0.0
PARKING LOT	+	1.4	2.9	0.4

CYNTERGY
810 SOUTH CINCINNATI
SECOND FLOOR
TULSA, OK 74119
918.877.6000
www.cyntergy.com

THIS DOCUMENT IS
PRELIMINARY
IN NATURE AND IS NOT
A FINAL, SIGNED AND
SEALED DOCUMENT

CYNTERGY ENGINEERING, PLLC
REGISTRATION # F-2220

MATTHEW RUTKOWSKI
ENGINEER OF RECORD

TSC TRACTOR SUPPLY CO.

LUCAS, TX

STIPULATION FOR REUSE

ISSUES / REVISIONS

ISSUE DATE:
CHECKED BY: MJR
DRAWN BY: JRM

SHEET NAME
ELECTRICAL PHOTOMETRIC PLAN

SHEET NUMBER
ES-102

Printed: 5/4/2023 8:24:37 AM
User: Matthew.Rutkowski
Drawing Location: "R:\Drawings\Revised\ES-102.DWG"

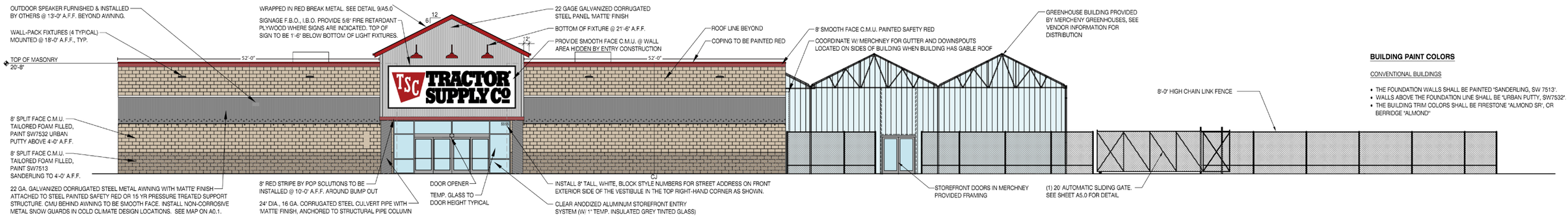

BUILDING PAINT COLORS

CONVENTIONAL BUILDINGS

- THE FOUNDATION WALLS SHALL BE PAINTED 'SANDERLING, SW 7513'.
- WALLS ABOVE THE FOUNDATION LINE SHALL BE 'URBAN PUTTY', SW7532'.
- THE BUILDING TRIM COLORS SHALL BE FIRESTONE 'ALMOND SR', OR BERRIDGE 'ALMOND'

1 ELEVATION — FRONT

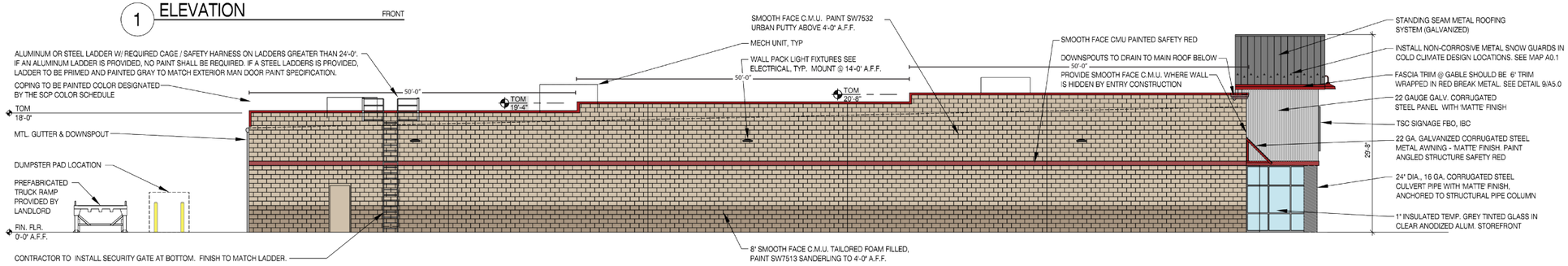

2 ELEVATION — LEFT SIDE

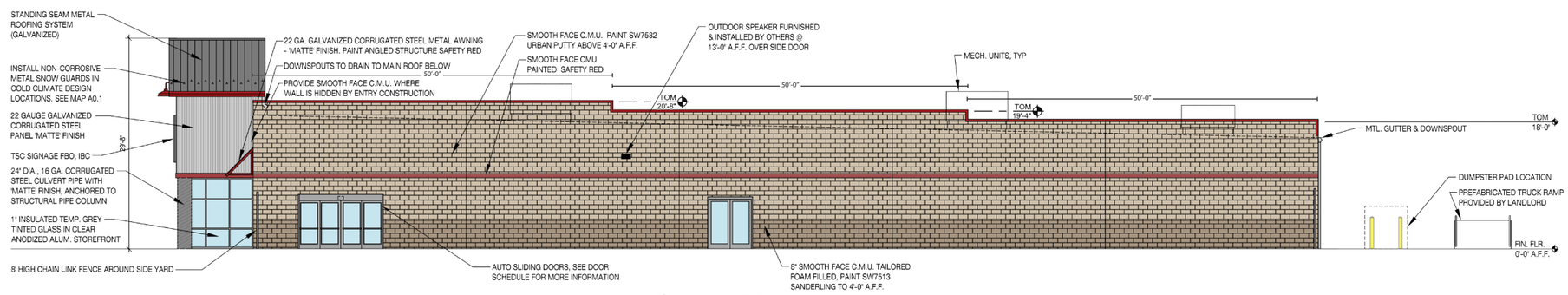

3 ELEVATION — RIGHT SIDE

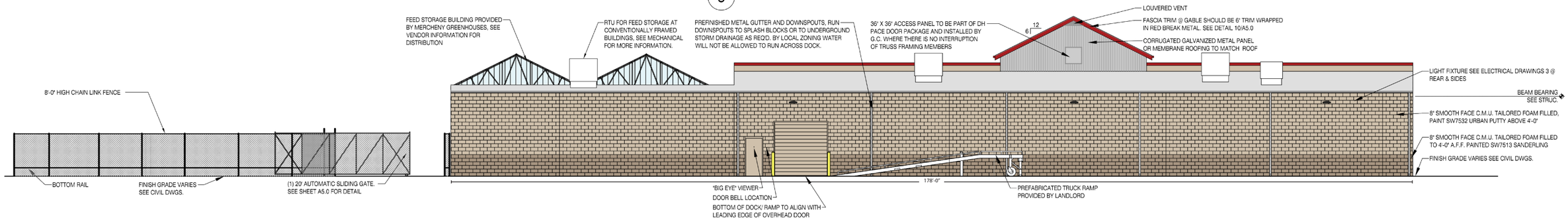

4B ELEVATION — REAR

TRACTOR SUPPLY CO

COLORED ELEVATIONS
LUCAS, TEXAS
04.13.2021

TRACTOR SUPPLY CO

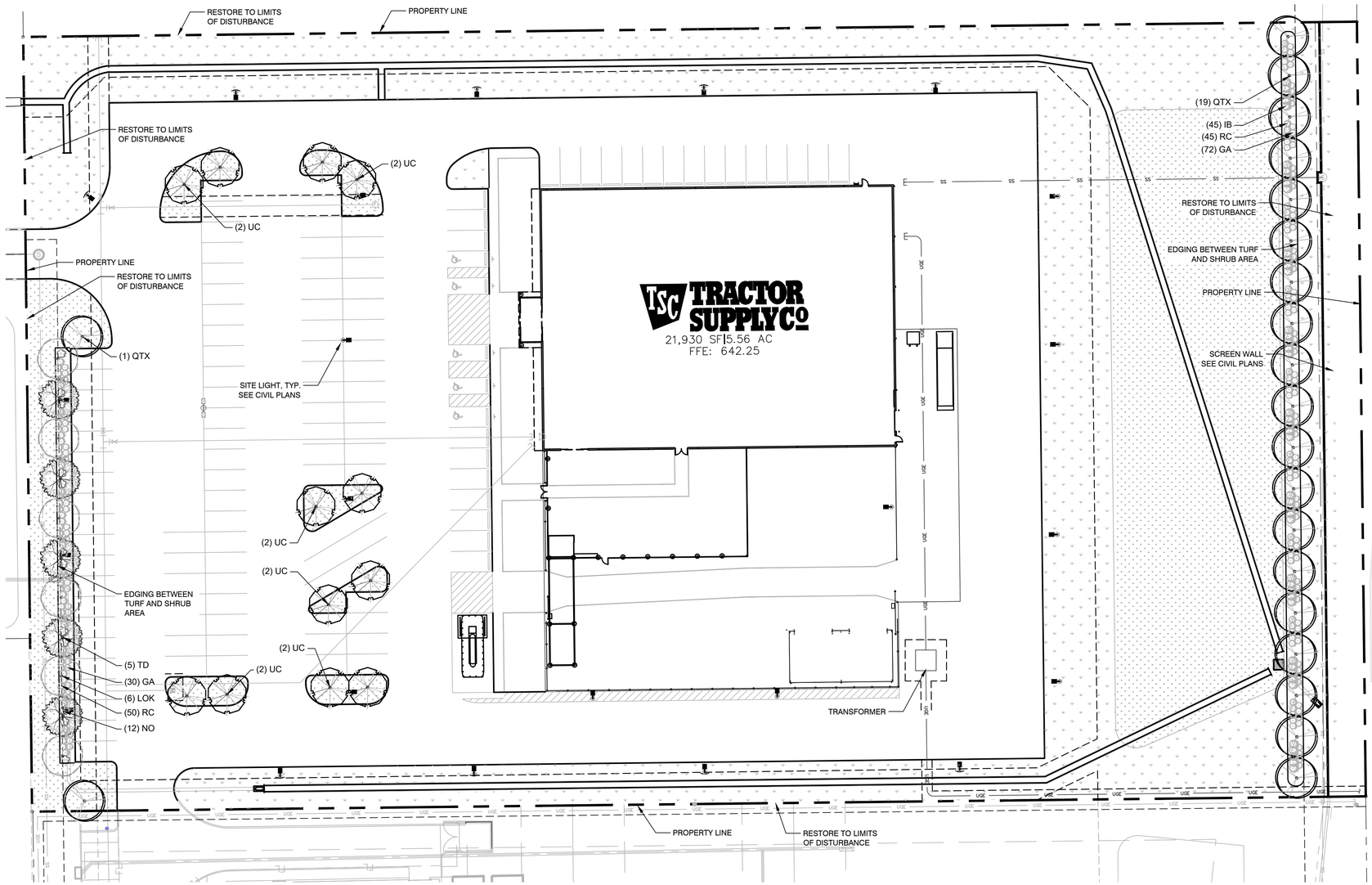

PLANT SCHEDULE

TREES	CODE	QTY	BOTANICAL / COMMON NAME	CALIPER	CONTAINER	SIZE
	LOK	6	Quercas virginiana Live Oak	3" Cal.	Cont. or B&B	10`-12`
	QTX	21	Quercus texana Texas Red Oak	3" Cal.	Cont. or B&B	10`-12`
	TD	5	Taxodium distichum Bald Cypress	3" Cal.	Cont. or B&B	10`-12`
	UC	12	Ulmus crassifolia Cedar Elm	3" Cal.	Cont. or B&B	10`-12`

SHRUBS	CODE	QTY	BOTANICAL / COMMON NAME	CONTAINER	SPACING	SIZE
	GA	102	Abelia grandiflora Glossy Abelia	5 gal	Per Plan	24" MIN
	IB	45	Ilex cornuta `Burfordii Nana` Dwarf Burford Holly	5 gal	Per Plan	18" Min.
	NO	12	Nerium oleander `Petite Pink` Dwarf Oleander	5 gal	Per Plan	18" Min.
	RC	95	Rhaphiolepis indica `Clara` Indian Hawthorn	5 gal	Per Plan	18" Min.

GROUND COVERS	CODE	QTY	BOTANICAL / COMMON NAME	CONT	SPACING	SIZE
	BG	48,589 sf	Cynodon dactylon `tif 419` Bermuda Grass	Hydromulch		
	CD	30,849 sf	Cynodon dactylon `tif 419` Bermuda Grass	Sod		

0' 15' 30' 60'
Scale 1" = 30'

ROOT BARRIERS

THE CONTRACTOR SHALL INSTALL ROOT BARRIERS NEAR ALL NEWLY-PLANTED TREES THAT ARE LOCATED WITHIN FIVE (5) FEET OF PAVING OR CURBS. ROOT BARRIERS SHALL BE "CENTURY" OR "DEEP-ROOT" 24" DEEP PANELS (OR EQUAL). BARRIERS SHALL BE LOCATED IMMEDIATELY ADJACENT TO HARDSCAPE. INSTALL PANELS PER MANUFACTURER'S RECOMMENDATIONS. UNDER NO CIRCUMSTANCES SHALL THE CONTRACTOR USE ROOT BARRIERS OF A TYPE THAT COMPLETELY ENCIRCLE THE ROOTBALL.

MULCHES

AFTER ALL PLANTING IS COMPLETE, CONTRACTOR SHALL INSTALL 3" THICK LAYER OF 1-1/2" SHREDDED WOOD MULCH, NATURAL (UNDYED), OVER LANDSCAPE FABRIC IN ALL PLANTING AREAS (EXCEPT FOR TURF AND SEEDED AREAS). CONTRACTOR SHALL SUBMIT SAMPLES OF ALL MULCHES TO LANDSCAPE ARCHITECT AND OWNER FOR APPROVAL PRIOR TO CONSTRUCTION. ABSOLUTELY NO EXPOSED GROUND SHALL BE LEFT SHOWING ANYWHERE ON THE PROJECT AFTER MULCH HAS BEEN INSTALLED (SUBJECT TO THE CONDITIONS AND REQUIREMENTS OF THE "GENERAL GRADING AND PLANTING NOTES" AND SPECIFICATIONS).

LANDSCAPE CALCULATIONS

TOTAL SITE AREA:	242,217 SF
LANDSCAPE AREA REQUIRED:	36,332 SF (15% OF SITE AREA)
LANDSCAPE AREA PROVIDED:	92,676 SF (38.2% OF SITE AREA)
STREET TREES	
ALLISON LANE FRONTAGE LENGTH:	374.95 LF
STREET TREES REQUIRED:	19 TREES (1 PER 20 LF OF FRONTAGE)
STREET TREES PROVIDED:	19 TREES
SHRUBS REQUIRED:	150 SHRUBS (8 PER 20 LF OF FRONTAGE)
SHRUBS PROVIDED:	162 SHRUBS
PARKING SCREENING	N/A (NOT ADJACENT TO STREET)
PARKING PERIMETER	211 LF
TREES REQUIRED:	11 TREES (1 PER 20 LF OF FRONTAGE)
TREES PROVIDED:	11 TREES
SHRUBS REQUIRED:	85 SHRUBS (8 PER 20 LF OF FRONTAGE)
SHRUBS PROVIDED:	92 SHRUBS
PARKING INTERIOR	
TOTAL SITE AREA:	65,367 SF
LANDSCAPE AREA REQUIRED:	5,229 SF (8% OF SITE AREA)
LANDSCAPE AREA PROVIDED:	5,280 SF (8% OF SITE AREA)
TREES REQUIRED:	12 TREES (1 TREE /10 SPACES; 119 SPACES)
TREES PROVIDED:	12 TREES
LOADING AREA SCREENING	PROVIDED

GENERAL GRADING AND PLANTING NOTES

1. BY SUBMITTING A PROPOSAL FOR THE LANDSCAPE PLANTING SCOPE OF WORK, THE CONTRACTOR CONFIRMS THAT HE HAS READ, AND WILL COMPLY WITH, THE ASSOCIATED NOTES, SPECIFICATIONS, AND DETAILS WITH THIS PROJECT.
2. THE GENERAL CONTRACTOR IS RESPONSIBLE FOR REMOVING ALL EXISTING VEGETATION (EXCEPT WHERE NOTED TO REMAIN).
3. IN THE CONTEXT OF THESE PLANS, NOTES, AND SPECIFICATIONS, "FINISH GRADE" REFERS TO THE FINAL ELEVATION OF THE SOIL SURFACE (NOT TOP OF MULCH) AS INDICATED ON THE GRADING PLANS.
   a. BEFORE STARTING WORK, THE LANDSCAPE CONTRACTOR SHALL VERIFY THAT THE ROUGH GRADES OF ALL LANDSCAPE AREAS ARE WITHIN +/-0.1' OF FINISH GRADE. SEE SPECIFICATIONS FOR MORE DETAILED INSTRUCTION ON TURF AREA AND PLANTING BED PREPARATION.
   b. CONSTRUCT AND MAINTAIN FINISH GRADES AS SHOWN ON GRADING PLANS, AND CONSTRUCT AND MAINTAIN SLOPES AS RECOMMENDED BY THE GEOTECHNICAL REPORT. ALL LANDSCAPE AREAS SHALL HAVE POSITIVE DRAINAGE AWAY FROM STRUCTURES AT THE MINIMUM SLOPE SPECIFIED IN THE REPORT AND ON THE GRADING PLANS, AND AREAS OF POTENTIAL PONDING SHALL BE REGRADED TO BLEND IN WITH THE SURROUNDING GRADES AND ELIMINATE PONDING POTENTIAL.
   c. THE LANDSCAPE CONTRACTOR SHALL DETERMINE WHETHER OR NOT THE EXPORT OF ANY SOIL WILL BE NEEDED, TAKING INTO ACCOUNT THE ROUGH GRADE PROVIDED, THE AMOUNT OF SOIL AMENDMENTS TO BE ADDED (**BASED ON A SOIL TEST**, PER SPECIFICATIONS), AND THE FINISH GRADES TO BE ESTABLISHED.
   d. ENSURE THAT THE FINISH GRADE IN SHRUB AREAS IMMEDIATELY ADJACENT TO WALKS AND OTHER WALKING SURFACES, AFTER INSTALLING SOIL AMENDMENTS, IS 3" BELOW THE ADJACENT FINISH SURFACE, IN ORDER TO ALLOW FOR PROPER MULCH DEPTH. TAPER THE SOIL SURFACE TO MEET FINISH GRADE, AS SPECIFIED ON THE GRADING PLANS, AT APPROXIMATELY 18" AWAY FROM THE WALKS.
   e. ENSURE THAT THE FINISH GRADE IN TURF AREAS IMMEDIATELY ADJACENT TO WALKS AND OTHER WALKING SURFACES, AFTER INSTALLING SOIL AMENDMENTS, IS 1" BELOW THE FINISH SURFACE OF THE WALKS. TAPER THE SOIL SURFACE TO MEET FINISH GRADE, AS SPECIFIED ON THE GRADING PLANS, AT APPROXIMATELY 18" AWAY FROM THE WALKS.
   f. SHOULD ANY CONFLICTS AND/OR DISCREPANCIES ARISE BETWEEN THE GRADING PLANS, GEOTECHNICAL REPORT, THESE NOTES AND PLANS, AND ACTUAL CONDITIONS, THE CONTRACTOR SHALL IMMEDIATELY BRING SUCH ITEMS TO THE ATTENTION OF THE LANDSCAPE ARCHITECT, GENERAL CONTRACTOR, AND OWNER.
4. ALL PLANT LOCATIONS ARE DIAGRAMMATIC. ACTUAL LOCATIONS SHALL BE VERIFIED WITH THE LANDSCAPE ARCHITECT OR DESIGNER PRIOR TO PLANTING. THE LANDSCAPE CONTRACTOR SHALL ENSURE THAT ALL REQUIREMENTS OF THE PERMITTING AUTHORITY ARE MET (I.E., MINIMUM PLANT QUANTITIES, PLANTING METHODS, TREE PROTECTION METHODS, ETC.).
   a. THE LANDSCAPE CONTRACTOR IS RESPONSIBLE FOR DETERMINING PLANT QUANTITIES; PLANT QUANTITIES SHOWN ON LEGENDS AND CALLOUTS ARE FOR GENERAL INFORMATION ONLY. IN THE EVENT OF A DISCREPANCY BETWEEN THE PLAN AND THE PLANT LEGEND, THE PLANT QUANTITY AS SHOWN ON THE PLAN (FOR INDIVIDUAL SYMBOLS) OR CALLOUT (FOR GROUNDCOVER PATTERNS) SHALL TAKE PRECEDENCE.
   b. NO SUBSTITUTIONS OF PLANT MATERIALS SHALL BE ALLOWED WITHOUT THE WRITTEN PERMISSION OF THE LANDSCAPE ARCHITECT. IF SOME OF THE PLANTS ARE NOT AVAILABLE, THE LANDSCAPE CONTRACTOR SHALL NOTIFY THE LANDSCAPE ARCHITECT IN WRITING (VIA PROPER CHANNELS).
   c. THE CONTRACTOR SHALL, AT A MINIMUM, PROVIDE REPRESENTATIVE PHOTOS OF ALL PLANTS PROPOSED FOR THE PROJECT. THE CONTRACTOR SHALL ALLOW THE LANDSCAPE ARCHITECT AND THE OWNER/OWNER'S REPRESENTATIVE TO INSPECT, AND APPROVE OR REJECT, ALL PLANTS DELIVERED TO THE JOBSITE. REFER TO SPECIFICATIONS FOR ADDITIONAL REQUIREMENTS FOR SUBMITTALS.
5. THE CONTRACTOR SHALL MAINTAIN THE LANDSCAPE IN A HEALTHY CONDITION FOR 90 DAYS AFTER ACCEPTANCE BY THE OWNER. REFER TO SPECIFICATIONS FOR CONDITIONS OF ACCEPTANCE FOR THE START OF THE MAINTENANCE PERIOD, AND FOR FINAL ACCEPTANCE AT THE END OF THE MAINTENANCE PERIOD.
6. SEE SPECIFICATIONS AND DETAILS FOR FURTHER REQUIREMENTS.

VICINITY MAP NOT TO SCALE

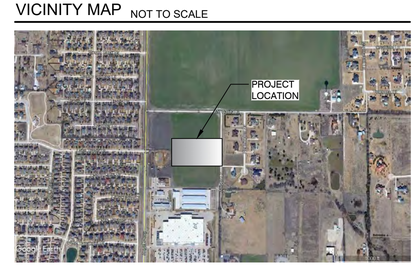

ZONING DESCRIPTION:
C - COMMERCIAL

OWNER:
PENNINGTON PARTNERS, LLC
3445 SHENANDOAH ST.
DALLAS, TX 75205
PH: 214.522.2252 CONTACT NAME: BILL SHIPLEY

APPLICANT:
CLAYMOORE ENGINEERING, INC.
301 S. COLEMAN ST.
PROSPER, TX 75078
PH: 817.281.0572 CONTACT NAME: MATT MOORE

SURVEYOR:
EAGLE SURVEYING, LLC
210 S. ELM ST. SUITE #104
DENTON, TX 76201
PH: 940.222.3009 CONTACT NAME: TYLER RANK

LEGAL DESCRIPTION:
5.65 ACRES OF LAND SITUATED IN THE WILLIAM SNIDER SURVEY, ABSTRACT NO. 821, CITY OF LUCAS, COLLIN COUNTY, TEXAS

CITY:	STATE:	
LUCAS	TEXAS	
COUNTY	SURVEY:	ABSTRACT NO.
COLLIN	WILLIAM SNIDER	821

TEXAS REGISTRATION #14199
CLAYMOORE ENGINEERING
1105 CHEEK SPRINGER RD. SUITE #1
COLLEYVILLE, TX 76034
PHONE: 817.281.0572
WWW.CLAYMOOREENG.COM

REGISTERED LANDSCAPE ARCHITECT
ERIC M. SHEPLEY
3537
STATE OF TEXAS
05-13-2021

TRACTOR SUPPLY CO.
LOT 1, BLOCK A
LUCAS, TX

No.	DATE	REVISION	BY

EVERGREEN DESIGN GROUP
(800) 680-6630
15455 Dallas Pkwy., Ste 600
Addison, TX 75001
www.EvergreenDesignGroup.com

LANDSCAPE PLANTING

DESIGN:	EMS
DRAWN:	EMS
CHECKED:	RM
DATE:	5/13/2021

SHEET
LP-1
File No. 2021-049

Texas811 Know what's below. Call before you dig.

PLOTTED BY: E5430
PLOT DATE: 5/13/2021 9:05 AM
LOCATION: C:\USERS\E5430\DROPBOX (EDG)\EDG - SHARED\2021\TRACTOR SUPPLY - LUCAS TX\TSC LUCAS 2021-05-13 LP.DWG
LAST SAVED: 5/13/2021 8:42 AM

PLANTING SPECIFICATIONS

GENERAL

A. QUALIFICATIONS OF LANDSCAPE CONTRACTOR
1. ALL LANDSCAPE WORK SHOWN ON THESE PLANS SHALL BE PERFORMED BY A SINGLE FIRM SPECIALIZING IN LANDSCAPE PLANTING.
2. A LIST OF SUCCESSFULLY COMPLETED PROJECTS OF THIS TYPE, SIZE AND NATURE MAY BE REQUESTED BY THE OWNER FOR FURTHER QUALIFICATION MEASURES.
3. THE LANDSCAPE CONTRACTOR SHALL HOLD A VALID NURSERY AND FLORAL CERTIFICATE ISSUED BY THE TEXAS DEPARTMENT OF AGRICULTURE, AS WELL AS OPERATE UNDER A COMMERCIAL PESTICIDE APPLICATOR LICENSE ISSUED BY EITHER THE TEXAS DEPARTMENT OF AGRICULTURE OR THE TEXAS STRUCTURAL PEST CONTROL BOARD.

B. SCOPE OF WORK
1. WORK COVERED BY THESE SECTIONS INCLUDES THE FURNISHING AND PAYMENT OF ALL MATERIALS, LABOR, SERVICES, EQUIPMENT, LICENSES, TAXES AND ANY OTHER ITEMS THAT ARE NECESSARY FOR THE EXECUTION, INSTALLATION AND COMPLETION OF ALL WORK, SPECIFIED HEREIN AND / OR SHOWN ON THE LANDSCAPE PLANS, NOTES, AND DETAILS.
2. ALL WORK SHALL BE PERFORMED IN ACCORDANCE WITH ALL APPLICABLE LAWS, CODES AND REGULATIONS REQUIRED BY AUTHORITIES HAVING JURISDICTION OVER SUCH WORK, INCLUDING ALL INSPECTIONS AND PERMITS REQUIRED BY FEDERAL, STATE AND LOCAL AUTHORITIES IN SUPPLY, TRANSPORTATION AND INSTALLATION OF MATERIALS.
3. THE LANDSCAPE CONTRACTOR SHALL VERIFY THE LOCATION OF ALL UNDERGROUND UTILITY LINES (WATER, SEWER, ELECTRICAL, TELEPHONE, GAS, CABLE, TELEVISION, ETC.) PRIOR TO THE START OF ANY WORK.

PRODUCTS

A. ALL MANUFACTURED PRODUCTS SHALL BE NEW.
B. CONTAINER AND BALLED-AND-BURLAPPED PLANTS:
1. FURNISH NURSERY-GROWN PLANTS COMPLYING WITH ANSI Z60.1-2014. PROVIDE WELL-SHAPED, FULLY BRANCHED, HEALTHY, VIGOROUS STOCK FREE OF DISEASE, INSECTS, EGGS, LARVAE, AND DEFECTS SUCH AS KNOTS, SUN SCALD, INJURIES, ABRASIONS, AND DISFIGUREMENT. ALL PLANTS WITHIN A SPECIES SHALL HAVE SIMILAR SIZE, AND SHALL BE OF A FORM TYPICAL FOR THE SPECIES. ALL TREES SHALL BE OBTAINED FROM SOURCES WITHIN 200 MILES OF THE PROJECT SITE, AND WITH SIMILAR CLIMACTIC CONDITIONS.
2. ROOT SYSTEMS SHALL BE HEALTHY, DENSELY BRANCHED ROOT SYSTEMS, NON-POT-BOUND, FREE FROM ENCIRCLING AND/OR GIRDLING ROOTS, AND FREE FROM ANY OTHER ROOT DEFECTS (SUCH AS J-SHAPED ROOTS).
3. TREES MAY BE PLANTED FROM CONTAINERS OR BALLED-AND-BURLAPPED (B&B), UNLESS SPECIFIED ON THE PLANTING LEGEND. BARE-ROOT TREES ARE NOT ACCEPTABLE.
4. ANY PLANT DEEMED UNACCEPTABLE BY THE LANDSCAPE ARCHITECT OR OWNER SHALL BE IMMEDIATELY REMOVED FROM THE SITE AND SHALL BE REPLACED WITH AN ACCEPTBLE PLANT OF LIKE TYPE AND SIZE AT THE CONTRACTOR'S OWN EXPENSE. ANY PLANTS APPEARING TO BE UNHEALTHY, EVEN IF DETERMINED TO STILL BE ALIVE, SHALL NOT BE ACCEPTED. THE LANDSCAPE ARCHITECT AND OWNER SHALL BE THE SOLE JUDGES AS TO THE ACCEPTABILITY OF PLANT MATERIAL.
5. ALL TREES SHALL BE STANDARD IN FORM, UNLESS OTHERWISE SPECIFIED. TREES WITH CENTRAL LEADERS WILL NOT BE ACCEPTED IF LEADER IS DAMAGED OR REMOVED. PRUNE ALL DAMAGED TWIGS AFTER PLANTING.
6. CALIPER MEASUREMENTS FOR STANDARD (SINGLE TRUNK) TREES SHALL BE AS FOLLOWS: SIX INCHES ABOVE THE ROOT FLARE FOR TREES UP TO AND INCLUDING FOUR INCHES IN CALIPER, AND TWELVE INCHES ABOVE THE ROOT FLARE FOR TREES EXCEEDING FOUR INCHES IN CALIPER.
7. MULTI-TRUNK TREES SHALL BE MEASURED BY THEIR OVERALL HEIGHT, MEASURED FROM THE TOP OF THE ROOT BALL. WHERE CALIPER MEASUREMENTS ARE USED, THE CALIPER SHALL BE CALCULATED AS ONE-HALF OF THE SUM OF THE CALIPER OF THE THREE LARGEST TRUNKS.
8. ANY TREE OR SHRUB SHOWN TO HAVE EXCESS SOIL PLACED ON TOP OF THE ROOT BALL, SO THAT THE ROOT FLARE HAS BEEN COMPLETELY COVERED, SHALL BE REJECTED.

C. SOD: PROVIDE WELL-ROOTED SOD OF THE VARIETY NOTED ON THE PLANS. SOD SHALL BE CUT FROM HEALTHY, MATURE TURF WITH SOIL THICKNESS OF 3/4" TO 1". EACH PALLET OF SOD SHALL BE ACCOMPANIED BY A CERTIFICATE FROM SUPPLIER STATING THE COMPOSITION OF THE SOD.
D. TOPSOIL: SANDY TO CLAY LOAM TOPSOIL, FREE OF STONES LARGER THAN ½ INCH, FOREIGN MATTER, PLANTS, ROOTS, AND SEEDS.
E. COMPOST: WELL-COMPOSTED, STABLE, AND WEED-FREE ORGANIC MATTER, pH RANGE OF 5.5 TO 8; MOISTURE CONTENT 35 TO 55 PERCENT BY WEIGHT; 100 PERCENT PASSING THROUGH 3/4-INCH SIEVE; SOLUBLE SALT CONTENT OF 5 TO 10 DECISIEMENS/M; NOT EXCEEDING 0.5 PERCENT INERT CONTAMINANTS AND FREE OF SUBSTANCES TOXIC TO PLANTINGS. NO MANURE OR ANIMAL-BASED PRODUCTS SHALL BE USED.
F. FERTILIZER: GRANULAR FERTILIZER CONSISTING OF NITROGEN, PHOSPHORUS, POTASSIUM, AND OTHER NUTRIENTS IN PROPORTIONS, AMOUNTS, AND RELEASE RATES RECOMMENDED IN A SOIL REPORT FROM A QUALIFIED SOIL-TESTING AGENCY (SEE BELOW).
G. MULCH: SIZE AND TYPE AS INDICATED ON PLANS, FREE FROM DELETERIOUS MATERIALS AND SUITABLE AS A TOP DRESSING OF TREES AND SHRUBS.
H. TREE STAKING AND GUYING
1. STAKES: 6' LONG GREEN METAL T-POSTS.
2. GUY AND TIE WIRE: ASTM A 641, CLASS 1, GALVANIZED-STEEL WIRE, 2-STRAND, TWISTED, 0.106 INCH DIAMETER.
3. STRAP CHAFING GUARD: REINFORCED NYLON OR CANVAS AT LEAST 1-1/2 INCH WIDE, WITH GROMMETS TO PROTECT TREE TRUNKS FROM DAMAGE.

I. STEEL EDGING: PROFESSIONAL STEEL EDGING, 14 GAUGE THICK X 4 INCHES WIDE, FACTORY PAINTED DARK GREEN. ACCEPTABLE MANUFACTURERS INCLUDE COL-MET OR APPROVED EQUAL.
J. PRE-EMERGENT HERBICIDES: ANY GRANULAR, NON-STAINING PRE-EMERGENT HERBICIDE THAT IS LABELED FOR THE SPECIFIC ORNAMENTALS OR TURF ON WHICH IT WILL BE UTILIZED. PRE-EMERGENT HERBICIDES SHALL BE APPLIED PER THE MANUFACTURER'S LABELED RATES.

METHODS

A. SOIL PREPARATION
1. BEFORE STARTING WORK, THE LANDSCAPE CONTRACTOR SHALL VERIFY THAT THE GRADE OF ALL LANDSCAPE AREAS ARE WITHIN +/-0.1' OF FINISH GRADE. THE CONTRACTOR SHALL NOTIFY THE OWNER IMMEDIATELY SHOULD ANY DISCREPANCIES EXIST.
2. SOIL TESTING:
   a. AFTER FINISH GRADES HAVE BEEN ESTABLISHED, CONTRACTOR SHALL HAVE SOIL SAMPLES FROM THE PROJECT'S LANDSCAPE AREAS TESTED BY AN ESTABLISHED SOIL TESTING LABORATORY. EACH SAMPLE SUBMITTED TO THE LAB SHALL CONTAIN NO LESS THAN ONE QUART OF SOIL, TAKEN FROM BETWEEN THE SOIL SURFACE AND 6" DEPTH. IF NO SAMPLE LOCATIONS ARE INDICATED ON THE PLANS, THE CONTRACTOR SHALL TAKE A MINIMUM OF THREE SAMPLES FROM VARIOUS REPRESENTATIVE LOCATIONS FOR TESTING.
   b. THE CONTRACTOR SHALL HAVE THE SOIL TESTING LABORATORY PROVIDE RESULTS FOR THE FOLLOWING: SOIL TEXTURAL CLASS, GENERAL SOIL FERTILITY, pH, ORGANIC MATTER CONTENT, SALT (CEC), LIME, SODIUM ADSORPTION RATIO (SAR) AND BORON CONTENT.
   c. THE CONTRACTOR SHALL ALSO SUBMIT THE PROJECT'S PLANT LIST TO THE LABORATORY ALONG WITH THE SOIL SAMPLES.
   d. THE SOIL REPORT PRODUCED BY THE LABORATORY SHALL CONTAIN RECOMMENDATIONS FOR THE FOLLOWING (AS APPROPRIATE): SEPARATE SOIL PREPARATION AND BACKFILL MIX RECOMMENDATIONS FOR GENERAL ORNAMENTAL PLANTS, XERIC PLANTS, TURF, AND NATIVE SEED, AS WELL AS PRE-PLANT FERTILIZER APPLICATIONS AND RECOMMENDATIONS FOR ANY OTHER SOIL RELATED ISSUES. THE REPORT SHALL ALSO PROVIDE A FERTILIZER PROGRAM FOR THE ESTABLISHMENT PERIOD AND FOR LONG-TERM MAINTENANCE.
3. THE CONTRACTOR SHALL INSTALL SOIL AMENDMENTS AND FERTILIZERS PER THE SOILS REPORT RECOMMENDATIONS. ANY CHANGE IN COST DUE TO THE SOIL REPORT RECOMMENDATIONS, EITHER INCREASE OR DECREASE, SHALL BE SUBMITTED TO THE OWNER WITH THE REPORT.
4. FOR BIDDING PURPOSES ONLY, THE SOIL PREPARATION SHALL CONSIST OF THE FOLLOWING:
   a. TURF: INCORPORATE THE FOLLOWING AMENDMENTS INTO THE TOP 8" OF SOIL BY MEANS OF ROTOTILLING AFTER CROSS-RIPPING:
   i. NITROGEN STABILIZED ORGANIC AMENDMENT - 4 CU. YDS. PER 1,000 S.F.
   ii. PREPLANT TURF FERTILIZER (10-20-10 OR SIMILAR, SLOW RELEASE, ORGANIC) - 15 LBS PER 1,000 S.F.
   iii. "CLAY BUSTER" OR EQUAL - USE MANUFACTURER'S RECOMMENDED RATE
   b. TREES, SHRUBS, AND PERENNIALS: INCORPORATE THE FOLLOWING AMENDMENTS INTO THE TOP 8" OF SOIL BY MEANS OF ROTOTILLING AFTER CROSS-RIPPING:
   i. NITROGEN STABILIZED ORGANIC AMENDMENT - 4 CU. YDS. PER 1,000 S.F.
   ii. 12-12-12 FERTILIZER (OR SIMILAR, ORGANIC, SLOW RELEASE) - 10 LBS. PER CU. YD.
   iii. "CLAY BUSTER" OR EQUAL - USE MANUFACTURER'S RECOMMENDED RATE
   iv. IRON SULPHATE - 2 LBS. PER CU. YD.
5. IN THE CONTEXT OF THESE PLANS, NOTES, AND SPECIFICATIONS, "FINISH GRADE" REFERS TO THE FINAL ELEVATION OF THE SOIL SURFACE (NOT TOP OF MULCH) AS INDICATED ON THE GRADING PLANS.
   a. BEFORE STARTING WORK, THE LANDSCAPE CONTRACTOR SHALL VERIFY THAT THE ROUGH GRADES OF ALL LANDSCAPE AREAS ARE WITHIN +/-0.1' OF FINISH GRADE. SEE SPECIFICATIONS FOR MORE DETAILED INSTRUCTION ON TURF AREA AND PLANTING BED PREPARATION.
   b. CONSTRUCT AND MAINTAIN FINISH GRADES AS SHOWN ON GRADING PLANS, AND CONSTRUCT AND MAINTAIN SLOPES AS RECOMMENDED BY THE GEOTECHNICAL REPORT. ALL LANDSCAPE AREAS SHALL HAVE POSITIVE DRAINAGE AWAY FROM STRUCTURES AT THE MINIMUM SLOPE SPECIFIED IN THE REPORT AND ON THE GRADING PLANS, AND AREAS OF POTENTIAL PONDING SHALL BE REGRADED TO BLEND IN WITH THE SURROUNDING GRADES AND ELIMINATE PONDING POTENTIAL.
   c. THE LANDSCAPE CONTRACTOR SHALL DETERMINE WHETHER OR NOT THE EXPORT OF ANY SOIL WILL BE NEEDED, TAKING INTO ACCOUNT THE ROUGH GRADE PROVIDED, THE AMOUNT OF SOIL AMENDMENTS TO BE ADDED (**BASED ON A SOIL TEST**, PER SPECIFICATIONS), AND THE FINISH GRADES TO BE ESTABLISHED.
   d. ENSURE THAT THE FINISH GRADE IN SHRUB AREAS IMMEDIATELY ADJACENT TO WALKS AND OTHER WALKING SURFACES, AFTER INSTALLING SOIL AMENDMENTS, IS 3" BELOW THE ADJACENT FINISH SURFACE, IN ORDER TO ALLOW FOR PROPER MULCH DEPTH. TAPER THE SOIL SURFACE TO MEET FINISH GRADE, AS SPECIFIED ON THE GRADING PLANS, AT APPROXIMATELY 18" AWAY FROM THE WALKS.
   e. ENSURE THAT THE FINISH GRADE IN TURF AREAS IMMEDIATELY ADJACENT TO WALKS AND OTHER WALKING SURFACES, AFTER INSTALLING SOIL AMENDMENTS, IS 1" BELOW THE FINISH SURFACE OF THE WALKS. TAPER THE SOIL SURFACE TO MEET FINISH GRADE, AS SPECIFIED ON THE GRADING PLANS, AT APPROXIMATELY 18" AWAY FROM THE WALKS.
   f. SHOULD ANY CONFLICTS AND/OR DISCREPANCIES ARISE BETWEEN THE GRADING PLANS, GEOTECHNICAL REPORT, THESE NOTES AND PLANS, AND ACTUAL CONDITIONS, THE CONTRACTOR SHALL IMMEDIATELY BRING SUCH ITEMS TO THE ATTENTION OF THE LANDSCAPE ARCHITECT, GENERAL CONTRACTOR, AND OWNER.
6. ONCE SOIL PREPARATION IS COMPLETE, THE LANDSCAPE CONTRACTOR SHALL ENSURE THAT THERE ARE NO DEBRIS, TRASH, OR STONES LARGER THAN 1" REMAINING IN THE TOP 6" OF SOIL.

B. SUBMITTALS
1. THE CONTRACTOR SHALL PROVIDE SUBMITTALS AND SAMPLES, IF REQUIRED, TO THE LANDSCAPE ARCHITECT, AND RECEIVE APPROVAL IN WRITING FOR SUCH SUBMITTALS BEFORE WORK COMMENCES.
2. SUBMITTALS SHALL INCLUDE PHOTOS OF PLANTS WITH A RULER OR MEASURING STICK FOR SCALE, PHOTOS OR SAMPLES OF ANY REQUIRED MULCHES, AND SOIL TEST RESULTS AND PREPARATION RECOMMENDATIONS FROM THE TESTING LAB (INCLUDING COMPOST AND FERTILIZER RATES AND TYPES, AND OTHER AMENDMENTS FOR TREE/SHRUB, TURF, AND SEED AREAS AS MAY BE APPROPRIATE).
3. SUBMITTALS SHALL ALSO INCLUDE MANUFACTURER CUT SHEETS FOR PLANTING ACCESSORIES SUCH AS TREE STAKES AND TIES, EDGING, AND LANDSCAPE FABRICS (IF ANY).
4. WHERE MULTIPLE ITEMS ARE SHOWN ON A PAGE, THE CONTRACTOR SHALL CLEARLY INDICATE THE ITEM BEING CONSIDERED.

C. GENERAL PLANTING
1. REMOVE ALL NURSERY TAGS AND STAKES FROM PLANTS.
2. EXCEPT IN AREAS TO BE PLANTED WITH ORNAMENTAL GRASSES, APPLY PRE-EMERGENT HERBICIDES AT THE MANUFACTURER'S RECOMMENDED RATE.
3. TRENCHING NEAR EXISTING TREES:
   a. CONTRACTOR SHALL NOT DISTURB ROOTS 1-1/2" AND LARGER IN DIAMETER WITHIN THE CRITICAL ROOT ZONE (CRZ) OF EXISTING TREES, AND SHALL EXERCISE ALL POSSIBLE CARE AND PRECAUTIONS TO AVOID INJURY TO TREE ROOTS, TRUNKS, AND BRANCHES. THE CRZ IS DEFINED AS A CIRCULAR AREA EXTENDING OUTWARD FROM THE TREE TRUNK, WITH A RADIUS EQUAL TO 1' FOR EVERY 1" OF TRUNK DIAMETER-AT-BREAST-HEIGHT (4.5' ABOVE THE AVERAGE GRADE AT THE TRUNK).
   b. ALL EXCAVATION WITHIN THE CRZ SHALL BE PERFORMED USING HAND TOOLS. NO MACHINE EXCAVATION OR TRENCHING OF ANY KIND SHALL BE ALLOWED WITHIN THE CRZ.
   c. ALTER ALIGNMENT OF PIPE TO AVOID TREE ROOTS 1-1/2" AND LARGER IN DIAMETER. WHERE TREE ROOTS 1-1/2" AND LARGER IN DIAMETER ARE ENCOUNTERED IN THE FIELD, TUNNEL UNDER SUCH ROOTS. WRAP EXPOSED ROOTS WITH SEVERAL LAYERS OF BURLAP AND KEEP MOIST. CLOSE ALL TRENCHES WITHIN THE CANOPY DRIP LINES WITHIN 24 HOURS.
   d. ALL SEVERED ROOTS SHALL BE HAND PRUNED WITH SHARP TOOLS AND ALLOWED TO AIR-DRY. DO NOT USE ANY SORT OF SEALERS OR WOUND PAINTS.

D. TREE PLANTING
1. TREE PLANTING HOLES SHALL BE EXCAVATED TO MINIMUM WIDTH OF TWO TIMES THE WIDTH OF THE ROOTBALL, AND TO A DEPTH EQUAL TO THE DEPTH OF THE ROOTBALL LESS TWO TO FOUR INCHES.
2. SCARIFY THE SIDES AND BOTTOM OF THE PLANTING HOLE PRIOR TO THE PLACEMENT OF THE TREE. REMOVE ANY GLAZING THAT MAY HAVE BEEN CAUSED DURING THE EXCAVATION OF THE HOLE.
3. FOR CONTAINER AND BOX TREES, TO REMOVE ANY POTENTIALLY GIRDLING ROOTS AND OTHER ROOT DEFECTS, THE CONTRACTOR SHALL SHAVE A 1" LAYER OFF OF THE SIDES AND BOTTOM OF THE ROOTBALL OF ALL TREES JUST BEFORE PLACING INTO THE PLANTING PIT. DO NOT "TEASE" ROOTS OUT FROM THE ROOTBALL.
4. INSTALL THE TREE ON UNDISTURBED SUBGRADE SO THAT THE TOP OF THE ROOTBALL IS TWO TO FOUR INCHES ABOVE THE SURROUNDING GRADE.
5. BACKFILL THE TREE HOLE UTILIZING THE EXISTING TOPSOIL FROM ON-SITE. ROCKS LARGER THAN 1" DIA. AND ALL OTHER DEBRIS SHALL BE REMOVED FROM THE SOIL PRIOR TO THE BACKFILL. SHOULD ADDITIONAL SOIL BE REQUIRED TO ACCOMPLISH THIS TASK, USE STORED TOPSOIL FROM ON-SITE OR IMPORT ADDITIONAL TOPSOIL FROM OFF-SITE AT NO ADDITIONAL COST TO THE OWNER. IMPORTED TOPSOIL SHALL BE OF SIMILAR TEXTURAL CLASS AND COMPOSITION IN THE ON-SITE SOIL.
6. TREES SHALL NOT BE STAKED UNLESS LOCAL CONDITIONS (SUCH AS HEAVY WINDS OR SLOPES) REQUIRE STAKES TO KEEP TREES UPRIGHT. SHOULD STAKING BE REQUIRED, THE TOTAL NUMBER OF TREE STAKES (BEYOND THE MINIMUMS LISTED BELOW) WILL BE LEFT TO THE LANDSCAPE CONTRACTOR'S DISCRETION. SHOULD ANY TREES FALL OR LEAN, THE LANDSCAPE CONTRACTOR SHALL STRAIGHTEN THE TREE, OR REPLACE IT SHOULD IT BECOME DAMAGED. TREE STAKING SHALL ADHERE TO THE FOLLOWING GUIDELINES:
   a. 1"-2" TREES — TWO STAKES PER TREE
   b. 2-1/2"-4" TREES — THREE STAKES PER TREE
   c. TREES OVER 4" CALIPER — GUY AS NEEDED
   d. MULTI-TRUNK TREES — THREE STAKES PER TREE MINIMUM, QUANTITY AND POSITIONS AS NEEDED TO STABILIZE THE TREE
   e. MULTI-TRUNK TREES — THREE STAKES PER TREE MINIMUM, QUANTITY AND POSITIONS AS NEEDED TO STABILIZE THE TREE
7. UPON COMPLETION OF PLANTING, CONSTRUCT AN EARTH WATERING BASIN AROUND THE TREE. COVER THE INTERIOR OF THE TREE RING WITH THE WEED BARRIER CLOTH AND TOPDRESS WITH MULCH (TYPE AND DEPTH PER PLANS).

E. SHRUB, PERENNIAL, AND GROUNDCOVER PLANTING
1. DIG THE PLANTING HOLES TWICE AS WIDE AND 2" LESS DEEP THAN EACH PLANT'S ROOTBALL. INSTALL THE PLANT IN THE HOLE. BACKFILL AROUND THE PLANT WITH SOIL AMENDED PER SOIL TEST RECOMMENDATIONS.
2. INSTALL THE WEED BARRIER CLOTH, OVERLAPPING IT AT THE ENDS. UTILIZE STEEL STAPLES TO KEEP THE WEED BARRIER CLOTH IN PLACE.
3. WHEN PLANTING IS COMPLETE, INSTALL MULCH (TYPE AND DEPTH PER PLANS) OVER ALL PLANTING BEDS, COVERING THE ENTIRE PLANTING AREA.

F. SODDING
1. SOD VARIETY TO BE AS SPECIFIED ON THE LANDSCAPE PLAN.
2. LAY SOD WITHIN 24 HOURS FROM THE TIME OF STRIPPING. DO NOT LAY IF THE GROUND IS FROZEN.
3. LAY THE SOD TO FORM A SOLID MASS WITH TIGHTLY FITTED JOINTS. BUTT ENDS AND SIDES OF SOD STRIPS - DO NOT OVERLAP. STAGGER STRIPS TO OFFSET JOINTS IN ADJACENT COURSES.
4. ROLL THE SOD TO ENSURE GOOD CONTACT OF THE SOD'S ROOT SYSTEM WITH THE SOIL UNDERNEATH.
5. WATER THE SOD THOROUGHLY WITH A FINE SPRAY IMMEDIATELY AFTER PLANTING TO OBTAIN AT LEAST SIX INCHES OF PENETRATION INTO THE SOIL BELOW THE SOD.

G. MULCH
1. INSTALL MULCH TOPDRESSING, TYPE AND DEPTH PER MULCH NOTE, IN ALL PLANTING AREAS AND TREE RINGS.
2. DO NOT INSTALL MULCH WITHIN 6" OF TREE ROOT FLARE AND WITHIN 24" OF HABITABLE STRUCTURES, EXCEPT AS MAY BE NOTED ON THESE PLANS. MULCH COVER WITHIN 6" OF CONCRETE WALKS AND CURBS SHALL NOT PROTRUDE ABOVE THE FINISH SURFACE OF THE WALKS AND CURBS. MULCH COVER WITHIN 12" OF WALLS SHALL BE AT LEAST 3" LOWER THAN THE TOP OF WALL.

H. CLEAN UP
1. DURING LANDSCAPE PREPARATION AND PLANTING, KEEP ALL PAVEMENT CLEAN AND ALL WORK AREAS IN A NEAT, ORDERLY CONDITION.
2. DISPOSED LEGALLY OF ALL EXCAVATED MATERIALS OFF THE PROJECT SITE.

I. INSPECTION AND ACCEPTANCE
1. UPON COMPLETION OF THE WORK, THE LANDSCAPE CONTRACTOR SHALL PROVIDE THE SITE CLEAN, FREE OF DEBRIS AND TRASH, AND SUITABLE FOR USE AS INTENDED. THE LANDSCAPE CONTRACTOR SHALL THEN REQUEST AN INSPECTION BY THE OWNER TO DETERMINE FINAL ACCEPTABILITY.
2. WHEN THE INSPECTED PLANTING WORK DOES NOT COMPLY WITH THE CONTRACT DOCUMENTS, THE LANDSCAPE CONTRACTOR SHALL REPLACE AND/OR REPAIR THE REJECTED WORK TO THE OWNER'S SATISFACTION WITHIN 24 HOURS.
3. THE LANDSCAPE MAINTENANCE PERIOD WILL NOT COMMENCE UNTIL THE LANDSCAPE WORK HAS BEEN RE-INSPECTED BY THE OWNER AND FOUND TO BE ACCEPTABLE. AT THAT TIME, A WRITTEN NOTICE OF FINAL ACCEPTANCE WILL BE ISSUED BY THE OWNER, AND THE MAINTENANCE AND GUARANTEE PERIODS WILL COMMENCE.

J. LANDSCAPE MAINTENANCE
1. THE LANDSCAPE CONTRACTOR SHALL BE RESPONSIBLE FOR THE MAINTENANCE OF ALL WORK SHOWN ON THESE PLANS FOR 90 DAYS BEYOND FINAL ACCEPTANCE OF ALL LANDSCAPE WORK BY THE OWNER. LANDSCAPE MAINTENANCE SHALL INCLUDE WEEKLY SITE VISITS FOR THE FOLLOWING ACTIONS (AS APPROPRIATE): PROPER PRUNING, RESTAKING OF TREES, RESETTING OF PLANTS THAT HAVE SETTLED, MOWING AND AERATION OF LAWNS, WEEDING, TREATING FOR INSECTS AND DISEASES,REPLACEMENT OF MULCH, REMOVAL OF LITTER, REPAIRS TO THE IRRIGATION SYSTEM DUE TO FAULTY PARTS AND/OR WORKMANSHIP, AND THE APPROPRIATE WATERING OF ALL PLANTINGS. THE LANDSCAPE CONTRACTOR SHALL MAINTAIN THE IRRIGATION SYSTEM IN PROPER WORKING ORDER, WITH SCHEDULING ADJUSTMENTS BY SEASON TO MAXIMIZE WATER CONSERVATION.
2. SHOULD SEEDED AND/OR SODDED AREAS NOT BE COVERED BY AN AUTOMATIC IRRIGATION SYSTEM, THE LANDSCAPE CONTRACTOR SHALL BE RESPONSIBLE FOR WATERING THESE AREAS AND OBTAINING A FULL, HEALTHY STAND OF PLANTS AT NO ADDITIONAL COST TO THE OWNER.
3. TO ACHIEVE FINAL ACCEPTANCE AT THE END OF THE MAINTENANCE PERIOD, ALL OF THE FOLLOWING CONDITIONS MUST OCCUR:
   a. THE LANDSCAPE SHALL SHOW ACTIVE, HEALTHY GROWTH (WITH EXCEPTIONS MADE FOR SEASONAL DORMANCY). ALL PLANTS NOT MEETING THIS CONDITION SHALL BE REJECTED AND REPLACED BY HEALTHY PLANT MATERIAL PRIOR TO FINAL ACCEPTANCE.
   b. ALL HARDSCAPE SHALL BE CLEANED PRIOR TO FINAL ACCEPTANCE.
   c. SODDED AREAS MUST BE ACTIVELY GROWING AND MUST REACH A MINIMUM HEIGHT OF 1 1/2 INCHES BEFORE FIRST MOWING. BARE AREAS LARGER THAN TWELVE SQUARE INCHES MUST BE RESODDED (AS APPROPRIATE) PRIOR TO FINAL ACCEPTANCE. ALL SODDED TURF SHALL BE NEATLY MOWED.

K. WARRANTY PERIOD, PLANT GUARANTEE AND REPLACEMENTS
1. THE LANDSCAPE CONTRACTOR SHALL GUARANTEE ALL TREES, SHRUBS, PERENNIALS, SOD, AND IRRIGATION SYSTEMS FOR A PERIOD OF ONE YEAR FROM THE DATE OF THE OWNER'S FINAL ACCEPTANCE (90 DAYS FOR ANNUAL PLANTS). THE CONTRACTOR SHALL REPLACE, AT HIS OWN EXPENSE AND TO THE SATISFACTION OF THE OWNER, ANY PLANTS WHICH DIE IN THAT TIME, OR REPAIR ANY PORTIONS OF THE IRRIGATION SYSTEM WHICH OPERATE IMPROPERLY.
2. AFTER THE INITIAL MAINTENANCE PERIOD AND DURING THE GUARANTEE PERIOD, THE LANDSCAPE CONTRACTOR SHALL ONLY BE RESPONSIBLE FOR REPLACEMENT OF PLANTS WHEN PLANT DEATH CANNOT BE ATTRIBUTED DIRECTLY TO OVERWATERING OR OTHER DAMAGE BY HUMAN ACTIONS.

L. PROVIDE A MINIMUM OF (2) COPIES OF RECORD DRAWINGS TO THE OWNER UPON COMPLETION OF WORK. A RECORD DRAWING IS A RECORD OF ALL CHANGES THAT OCCURRED IN THE FIELD AND THAT ARE DOCUMENTED THROUGH CHANGE ORDERS, ADDENDA, OR CONTRACTOR/CONSULTANT DRAWING MARKUPS.

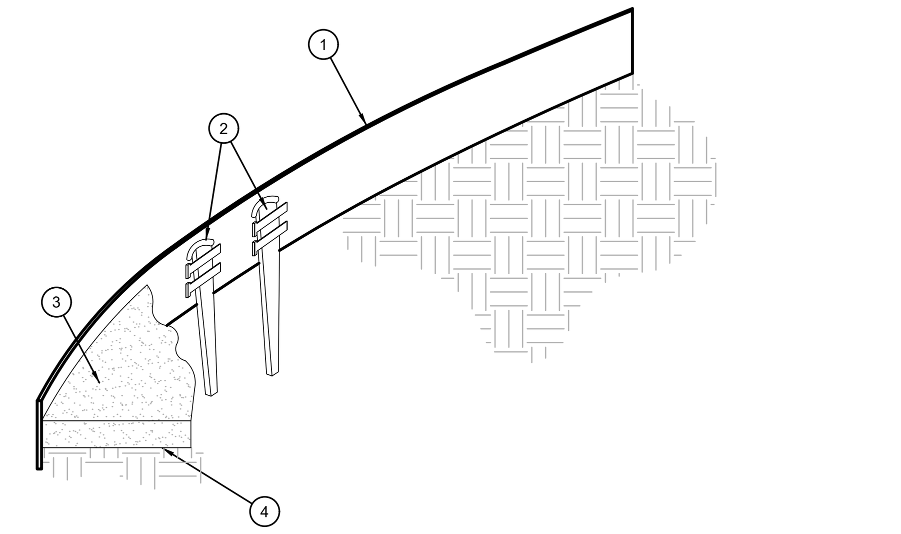

1. ROLLED-TOP STEEL EDGING PER PLANS.
2. TAPERED STEEL STAKES.
3. MULCH, TYPE AND DEPTH PER PLANS.
4. FINISH GRADE.

NOTES:
1) INSTALL EDGING SO THAT STAKES WILL BE ON INSIDE OF PLANTING BED.
2) BOTTOM OF EDGING SHALL BE BURIED A MINIMUM OF 1" BELOW FINISH GRADE.
3) TOP OF MULCH SHALL BE 1" LOWER THAN TOP OF EDGING.

D STEEL EDGING
SCALE: NOT TO SCALE

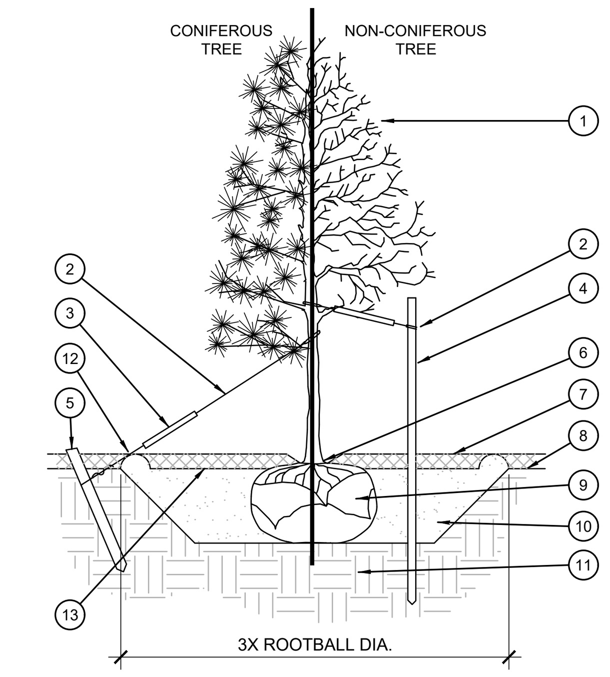

STAKING EXAMPLES (PLAN VIEW)

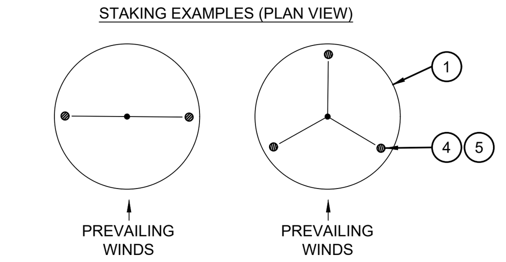

1. TREE CANOPY.
2. CINCH-TIES (24" BOX/2" CAL. TREES AND SMALLER) OR 12 GAUGE GALVANIZED WIRE WITH NYLON TREE STRAPS AT TREE AND STAKE (36" BOX/2.5" CAL. TREES AND LARGER). SECURE TIES OR STRAPS TO TRUNK JUST ABOVE LOWEST MAJOR BRANCHES.
3. 24" X 3/4" P.V.C. MARKERS OVER WIRES.
4. GREEN STEEL T-POSTS. EXTEND POSTS 12" MIN. INTO UNDISTURBED SOIL.
5. PRESSURE-TREATED WOOD DEADMAN, TWO PER TREE (MIN.). BURY OUTSIDE OF PLANTING PIT AND 18" MIN. INTO UNDISTURBED SOIL.
6. TRUNK FLARE.
7. MULCH, TYPE AND DEPTH PER PLANS. DO NOT PLACE MULCH WITHIN 6" OF TRUNK.
8. FINISH GRADE.
9. ROOT BALL.
10. BACKFILL. AMEND AND FERTILIZE ONLY AS RECOMMENDED IN SOIL FERTILITY ANALYSIS.
11. UNDISTURBED NATIVE SOIL.
12. 4" HIGH EARTHEN WATERING BASIN.
13. FINISH GRADE.

NOTES:
1. SCARIFY SIDES OF PLANTING PIT PRIOR TO SETTING TREE.
2. REMOVE EXCESS SOIL APPLIED ON TOP OF THE ROOTBALL THAT COVERS THE ROOT FLARE. THE PLANTING HOLE DEPTH SHALL BE SUCH THAT THE ROOTBALL RESTS ON UNDISTURBED SOIL, AND THE ROOT FLARE IS 2"-4" ABOVE FINISH GRADE.
3. FOR B&B TREES, CUT OFF BOTTOM 1/3 OF WIRE BASKET BEFORE PLACING TREE IN HOLE, CUT OFF AND REMOVE REMAINDER OF BASKET AFTER TREE IS SET IN HOLE, REMOVE ALL NYLON TIES, TWINE, ROPE, AND OTHER PACKING MATERIAL. REMOVE AS MUCH BURLAP FROM AROUND ROOTBALL AS IS PRACTICAL.
4. REMOVE ALL NURSERY STAKES AFTER PLANTING.
5. FOR TREES 36" BOX/2.5" CAL. AND LARGER, USE THREE STAKES OR DEADMEN (AS APPROPRIATE), SPACED EVENLY AROUND TREE.
6. STAKING SHALL BE TIGHT ENOUGH TO PREVENT TRUNK FROM BENDING, BUT LOOSE ENOUGH TO ALLOW SOME TRUNK MOVEMENT IN WIND.

A TREE PLANTING
SCALE: NOT TO SCALE

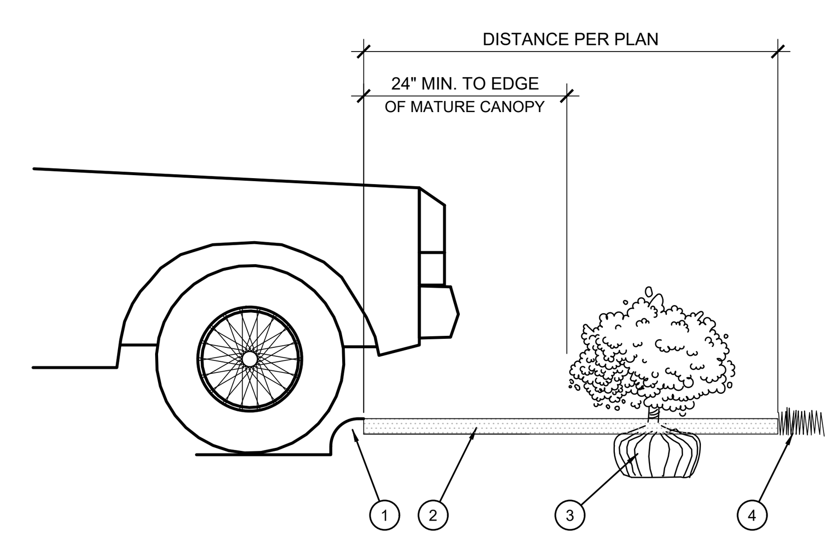

1. CURB.
2. MULCH LAYER.
3. PLANT.
4. TURF (WHERE SHOWN ON PLAN).

E PLANTING AT PARKING AREA
SCALE: NOT TO SCALE

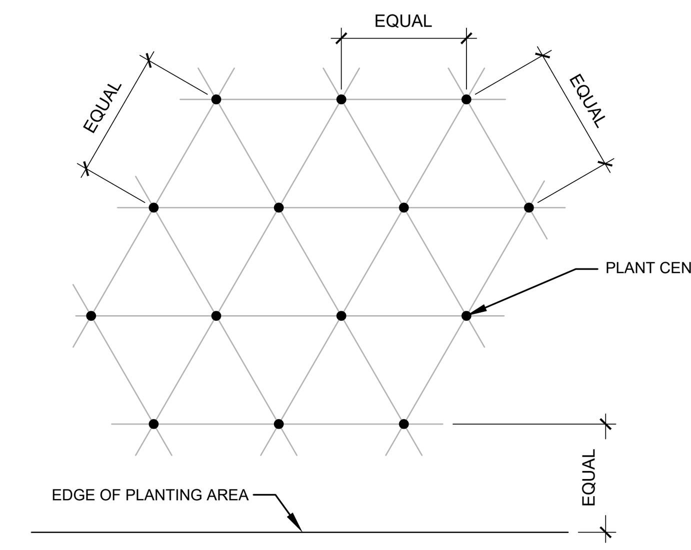

NOTE: ALL PLANTS SHALL BE PLANTED AT EQUAL TRIANGULAR SPACING (EXCEPT WHERE SHOWN ON PLANS AS INFORMAL GROUPINGS). REFER TO PLANT LEGEND FOR SPACING DISTANCE BETWEEN PLANTS.

1) STEP 1: DETERMINE TOTAL PLANTS FOR THE AREA WITH THE FOLLOWING FORMULA:
TOTAL AREA / AREA DIVIDER = TOTAL PLANTS

PLANT SPACING	AREA DIVIDER	PLANT SPACING	AREA DIVIDER
6"	0.22	18"	1.95
8"	0.39	24"	3.46
10"	0.60	30"	5.41
12"	0.87	36"	7.79
15"	1.35		

2) STEP 2: SUBTRACT THE ROW (S) OF PLANTS THAT WOULD OCCUR AT THE EDGE OF THE PLANTED AREA WITH THE FOLLOWING FORMULA: TOTAL PERIMETER LENGTH / PLANT SPACING = TOTAL PLANT SUBTRACTION

EXAMPLE: PLANTS AT 18" O.C. IN 100 SF PLANTING AREA, 40 LF PERIMETER
STEP 1: 100 SF/1.95 = 51 PLANTS
STEP 2: 51 PLANTS - (40 LF / 1.95 = 21 PLANTS) = 30 PLANTS TOTAL

C PLANT SPACING
SCALE: NTS

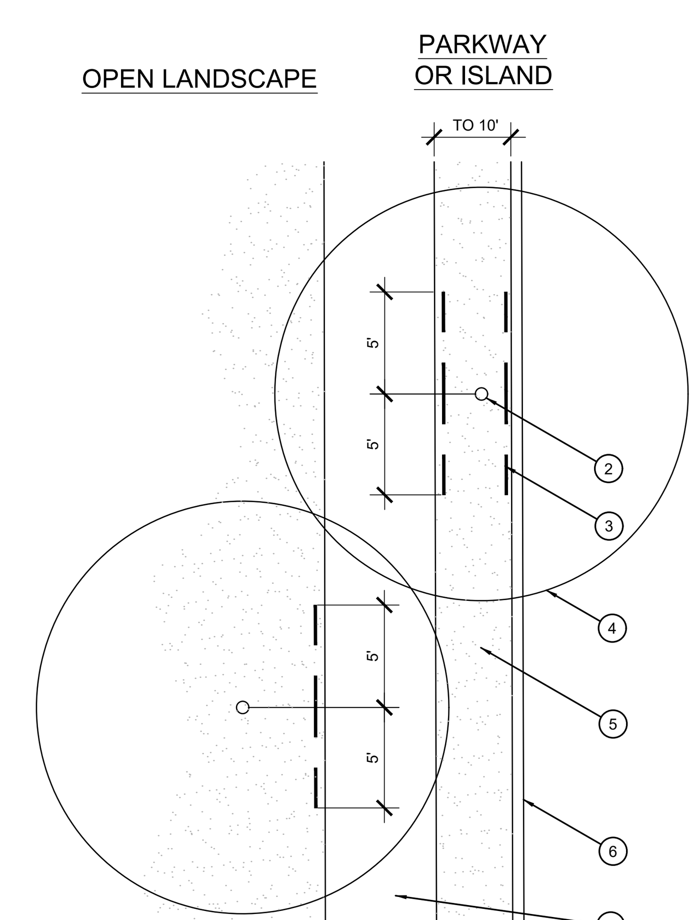

1. TYPICAL WALKWAY OR PAVING
2. TREE TRUNK
3. LINEAR ROOT BARRIER MATERIAL. SEE PLANTING NOTES FOR TYPE AND MANUFACTURER. INSTALL PER MANUFACTURER'S SPECIFICATIONS.
4. TREE CANOPY
5. TYPICAL PLANTING AREA
6. TYPICAL CURB AND GUTTER

NOTES:
1) INSTALL ROOT BARRIERS NEAR ALL NEWLY-PLANTED TREES THAT ARE LOCATED WITHIN FIVE (5) FEET OF PAVING OR CURBS.
2) BARRIERS SHALL BE LOCATED IMMEDIATELY ADJACENT TO HARDSCAPE. UNDER NO CIRCUMSTANCES SHALL THE CONTRACTOR USE ROOT BARRIERS OF A TYPE THAT COMPLETELY ENCIRCLE THE ROOTBALL.

F ROOT BARRIER - PLAN VIEW
SCALE: NOT TO SCALE

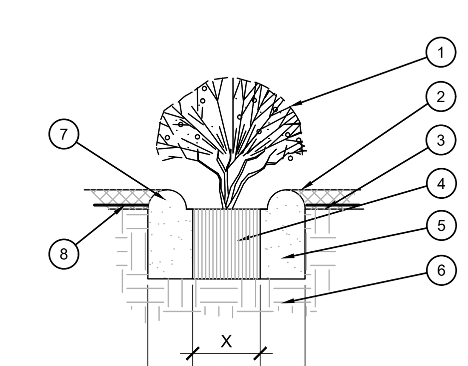

1. SHRUB, PERENNIAL, OR ORNAMENTAL GRASS.
2. MULCH, TYPE AND DEPTH PER PLANS. PLACE NO MORE THAN 1" OF MULCH WITHIN 6" OF PLANT CENTER.
3. FINISH GRADE.
4. ROOT BALL.
5. BACKFILL. AMEND AND FERTILIZE ONLY AS RECOMMENDED IN SOIL FERTILITY ANALYSIS.
6. UNDISTURBED NATIVE SOIL.
7. 3" HIGH EARTHEN WATERING BASIN.
8. WEED FABRIC UNDER MULCH.

B SHRUB AND PERENNIAL PLANTING
SCALE: NTS

EVERGREEN DESIGN GROUP
(800) 680-6630
15455 Dallas Pkwy., Ste 600
Addison, TX 75001
www.EvergreenDesignGroup.com

ZONING DESCRIPTION:
C - COMMERCIAL

OWNER:
PENNINGTON PARTNERS, LLC
3445 SHENANDOAH ST.
DALLAS, TX 75205
PH: 214.522.2252 CONTACT NAME: BILL SHIPLEY

APPLICANT:
CLAYMOORE ENGINEERING, INC.
301 S. COLEMAN ST.
PROSPER, TX 75078
PH: 817.281.0572 CONTACT NAME: MATT MOORE

SURVEYOR:
EAGLE SURVEYING, LLC
210 S. ELM ST. SUITE #104
DENTON, TX 76201
PH: 940.222.3009 CONTACT NAME: TYLER RANK

LEGAL DESCRIPTION:
5.65 ACRES OF LAND SITUATED IN THE WILLIAM SNIDER SURVEY, ABSTRACT NO. 821, CITY OF LUCAS, COLLIN COUNTY, TEXAS

CITY:	STATE:
LUCAS	TEXAS

COUNTY	SURVEY:	ABSTRACT NO.
COLLIN	WILLIAM SNIDER	821

TEXAS REGISTRATION #14199
CLAYMOORE ENGINEERING
1105 CHEEK SPARGER RD. SUITE #1
COLLEYVILLE, TX 76034
PHONE: 817.281.0572
WWW.CLAYMOOREENG.COM

REGISTERED LANDSCAPE ARCHITECT ERIC M. SHEPLEY 3537 STATE OF TEXAS
05-13-2021

TRACTOR SUPPLY CO.
LOT 1, BLOCK A
LUCAS, TX

No.	DATE	REVISION	BY

LANDSCAPE DETAILS & SPECIFICATIONS

DESIGN:	EMS
DRAWN:	EMS
CHECKED:	RM
DATE:	5/13/2021

SHEET
LP-2

File No. 2021-049

Texas 811 Know what's below. Call before you dig.

PLOTTED BY: E5430
PLOT DATE: 5/13/2021 9:05 AM
LOCATION: C:\USERS\E5430\DROPBOX (EDG)\EDG – SHARED\2021\TRACTOR SUPPLY – LUCAS TX\TSC LUCAS 2021-05-13 LP.DWG
LAST SAVED: 5/13/2021 8:42 AM

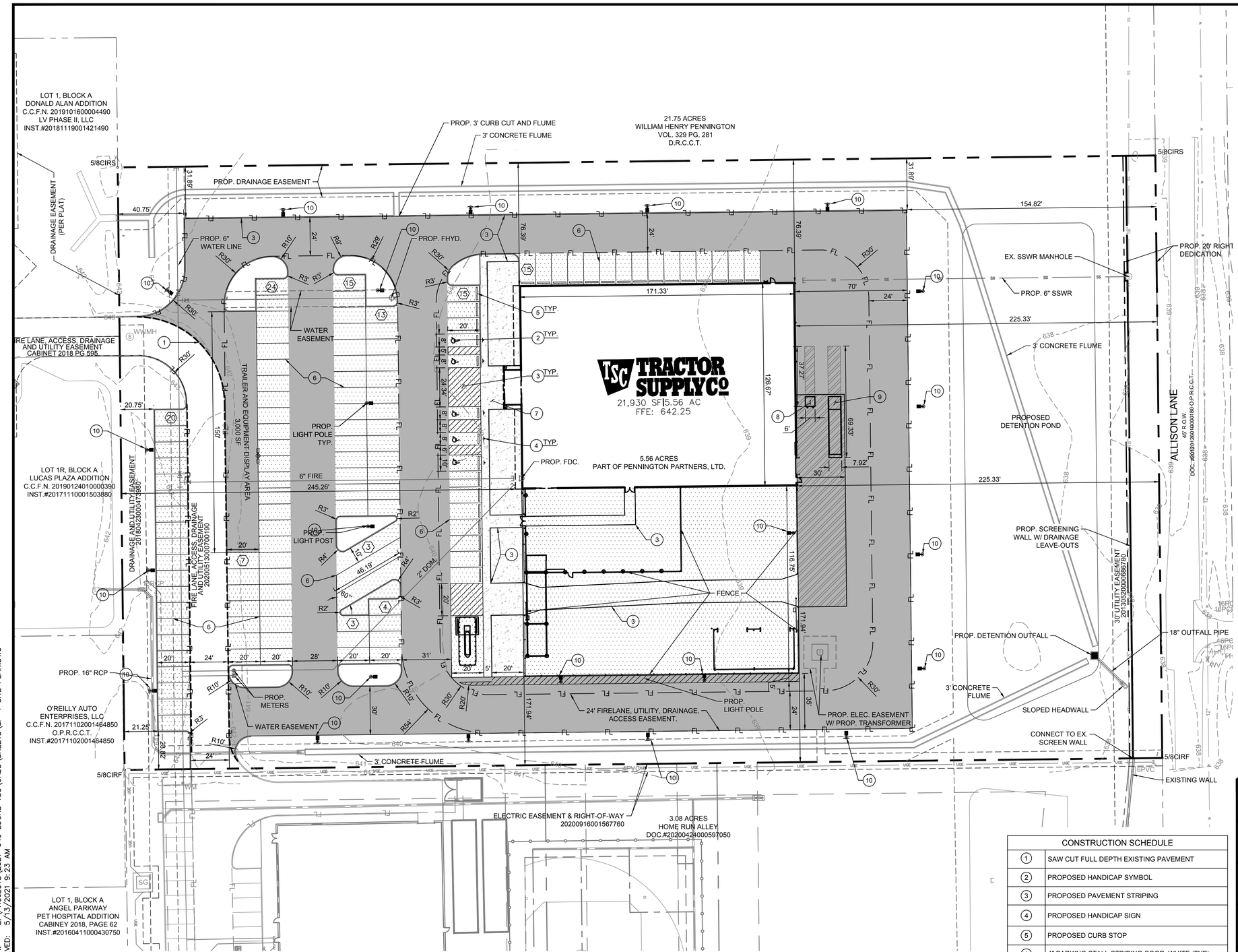

GRAPHIC SCALE

30 0 15 30 60

1 inch = 30 ft.

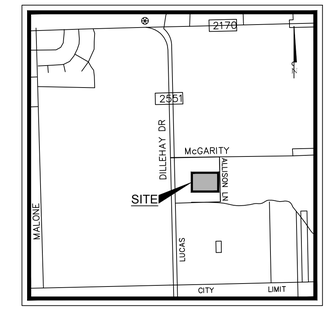

VICINITY MAP
N.T.S.

LEGEND	
	STANDARD DUTY CONCRETE PAVEMENT
	HEAVY DUTY CONCRETE PAVEMENT
	DUMPSTER AREA CONCRETE PAVEMENT
	SIDEWALK CONCRETE PAVEMENT
	PROPOSED CONCRETE CURB AND GUTTER
#	PARKING COUNT
	FULL-DEPTH SAWCUT
— FL —	PROPOSED FIRE LANE STRIPPING

NOTES:

1. ALL DIMENSIONS ARE TO FACE OF CURB UNLESS OTHERWISE NOTED.
2. REFER TO ARCHITECTURAL PLANS FOR BUILDING DIMENSIONS AND EXACT DOOR LOCATIONS.
3. REFER TO ARCHITECTURAL PLANS FOR FENCE AND GATE DETAILS.

CONSTRUCTION SCHEDULE	
1	SAW CUT FULL DEPTH EXISTING PAVEMENT
2	PROPOSED HANDICAP SYMBOL
3	PROPOSED PAVEMENT STRIPING
4	PROPOSED HANDICAP SIGN
5	PROPOSED CURB STOP
6	4" PARKING STALL STRIPING COOR: WHITE (TYP)
7	PROPOSED CONCRETE SIDEWALK
8	DUMPSTER WITH ENCLOSURE (REFER TO ARCHITECTURAL PLANS FOR DETAILS)
9	TRUCK DOCK/RAMP (REFER TO ARCHITECTURAL PLANS FOR DETAILS)

SITE DATA SUMMARY

LOT	ZONING	PROPOSED USE	LOT SIZE (ACRES)	LOT SIZE (SQ. FT.)	BLDG. AREA (SQ. FT.)	BLDG HGT. (FT)	# OF STORIES	LOT COVERAGE		FLR AREA RATIO		PARKING			HANDICAP SP.		TOTAL IMPERVIOUS		TOTAL PERVIOUS	
								REQ.	PROV.	REQ.	PROV.	REQ. RATIO	REQ.	PROV.	REQ.	PROV.	(SQ FT)	(%)	(SQ FT)	(%)
PROPOSED LOT 1	C - COMMERCIAL	RETAIL	5.56	242,218	21,930	35'-0" MAX.	1	40% MAX	9.1%	500 SF MIN.	0.09	RETAIL (1 PER 200 SF)	110	119	5	5	148,627	61%	93,591	39%

ZONING DESCRIPTION:

C - COMMERCIAL

OWNER:

PENNINGTON PARTNERS, LLC
3445 SHENANDOAH ST.
DALLAS, TX 75205
PH: 214.522.2252 CONTACT NAME: BILL SHIPLEY

APPLICANT:

CLAYMOORE ENGINEERING, INC.
301 S. COLEMAN ST.
PROSPER, TX 75078
PH: 817.281.0572 CONTACT NAME: MATT MOORE

SURVEYOR:

EAGLE SURVEYING, LLC
210 S. ELM ST. SUITE #104
DENTON, TX 76201
PH: 940.222.3009 CONTACT NAME: TYLER RANK

LEGAL DESCRIPTION:

5.65 ACRES OF LAND SITUATED IN THE WILLIAM SNIDER SURVEY, ABSTRACT NO. 821, CITY OF LUCAS, COLLIN COUNTY, TEXAS

CITY:	STATE:	
LUCAS	TEXAS	
COUNTY	SURVEY:	ABSTRACT NO.
COLLIN	WILLIAM SNIDER	821

TEXAS REGISTRATION #14199
CLAYMOORE ENGINEERING
1105 CHERK SPRINGER RD. SUITE #1
COLLEYVILLE, TX 76034
PHONE: 817.281.0572
WWW.CLAYMOORENG.COM

PRELIMINARY
FOR REVIEW ONLY
Not for construction purposes.
CLAYMOORE ENGINEERING
ENGINEERING AND PLANNING CONSULTANTS
Engineer: DREW DONOSKY
P.E. No. 125651 Date 5/13/2021

TRACTOR SUPPLY CO.
LOT 1, BLOCK A TRACTOR SUPPLY ADDITION
LUCAS, TX

No.	DATE	REVISION	BY

SITE PLAN

DESIGN:	CWP
DRAWN:	SD
CHECKED:	ASD
DATE:	5/13/2021

SHEET
SP-1

File No. 2021-049

PLOTTED BY: CURTIS PETERS
PLOT DATE: 5/13/2021 9:24 AM
LOCATION: Z:\PROJECTS\2021-049 LUCAS TSC\CADD\SHEETS\SP-1 SITE PLAN.DWG
LAST SAVED: 5/13/2021 9:23 AM

ORDINANCE 2021-06-00933

[Specific Use Permit to Allow Outside Storage by a Commercial Business – 495 South Angel Parkway]

AN ORDINANCE OF THE CITY OF LUCAS, TEXAS, AMENDING THE COMPREHENSIVE ZONING ORDINANCE AND MAP OF THE CITY OF LUCAS, TEXAS, AS HERETOFORE AMENDED, BY GRANTING A SPECIFIC USE PERMIT TO ALLOW FOR OUTSIDE STORAGE BY A COMMERCIAL BUSINESS ON A ±5.56-ACRE TRACT OF LAND, LOCATED AT 495 SOUTH ANGEL PARKWAY, CITY OF LUCAS, COLLIN COUNTY, TEXAS (THE "PROPERTY"), CURRENTLY ZONED COMMERCIAL BUSINESS DISTRICT (CB), AND BEING MORE PARTICULARLY DESCRIBED IN EXHIBIT "A" ATTACHED HERETO; PROVIDING FOR APPROVAL OF THE SITE PLAN ATTACHED HERETO AS EXHIBIT "B"; PROVIDING FOR THE APPROVAL OF THE PHOTOMETRIC PLAN, ATTACHED HERETO AS EXHIBIT "C"; PROVIDING FOR THE APPROVAL OF THE ELEVATIONS PLAN ATTACHED HERETO AS EXHIBIT "D"; PROVIDING FOR APPROVAL OF THE LANDSCAPE PLAN ATTACHED HERETO AS EXHIBIT "E"; PROVIDING FOR SPECIAL CONDITIONS; PROVIDING A CONFLICTS CLAUSE; PROVIDING A REPEALING CLAUSE; PROVIDING A SEVERABILITY CLAUSE; PROVIDING A SAVINGS CLAUSE; PROVIDING A PENALTY OF FINE NOT TO EXCEED THE SUM OF TWO THOUSAND DOLLARS ($2,000.00) FOR EACH OFFENSE; AND PROVIDING FOR AN EFFECTIVE DATE.

WHEREAS, the City Planning and Zoning Commission of the City of Lucas, Texas, and the governing body of the City of Lucas in compliance with the laws of the State of Texas and the ordinances of the City of Lucas, have given requisite notice of publication and otherwise, and after holding due hearings and affording a full and fair hearing to all property owners generally and to all persons interested and situated in the affected area, and in the vicinity thereof, and in the exercise of its legislative discretion have concluded that the Comprehensive Zoning Ordinance and Map of the City of Lucas, Texas, as previously amended, should be amended.

NOW, THEREFORE, BE IT ORDAINED BY THE CITY COUNCIL OF THE CITY OF LUCAS, TEXAS, THAT:

SECTION 1. That the Comprehensive Zoning Ordinance and Map of the City of Lucas, Texas, as heretofore amended, be and the same are hereby amended, to grant a Specific Use Permit to allow for outside storage by a commercial business on a ±5.56-acre tract of land, located at 495 South Angel Parkway (the "Property"), currently zoned Commercial Business District (CB), and being more particularly described in Exhibit "A", attached hereto and made a part hereof for all purposes.

SECTION 2. That the above-described property shall be used only in the manner and for the purposes provided for by the Comprehensive Zoning Ordinance of the City of Lucas as heretofore amended, subject to the following special conditions:

(1) The Property shall be developed in accordance with the Site Plan attached hereto as Exhibit "B"; the Photometric Plan attached hereto as Exhibit "C"; the Elevations Plan attached hereto as Exhibit "D", and, the Landscape Plan attached hereto as Exhibit "E", and made a part hereof for all purposes;

(2) The outside storage area shall be contained to the two areas depicted on the Site Plan; and

(3) The screening wall, trees and plants located on the east Property line shall be perpetually maintained to screen residential from the commercial business.

SECTION 3. To the extent of any irreconcilable conflict with the provisions of this ordinance and other ordinances of the City of Lucas governing the use and development of the Property and which are not expressly amended by this ordinance, the provisions of this ordinance shall be controlling.

SECTION 4. That all ordinances of the City of Lucas in conflict with the provisions of this Ordinance shall be, and same are hereby, repealed, provided, however, that all other provisions of said Ordinances are not in conflict herewith shall remain in full force and effect.

SECTION 5. That should any word, sentence, paragraph, subdivision, clause, phrase or section of this Ordinance or of the City of Lucas Code of Ordinances, as amended hereby, be adjudged or held to be voided or unconstitutional, the same shall not affect the validity of the remaining portions of said Ordinances or the City of Lucas Code of Ordinances, as amended hereby, which shall remain in full force and effect.

SECTION 6. An offense committed before the effective date of the Ordinance is governed by prior law and the provisions of the City of Lucas Code of Ordinances in effect when the offense was committed, and the former law is continued in effect for this purpose.

SECTION 7. That any person, firm or corporation violating any of the provisions or terms of this Ordinance shall be subject to the same penalty as provided for in the Code of Ordinances, as amended, and upon conviction in the municipal court shall be punished by a fine not to exceed the sum of Two Thousand Dollars ($2,000.00) for each offense, and each and every day such violation shall continue shall be deemed to constitute a separate offense.

SECTION 8. That this Ordinance shall take effect immediately from and after its passage and publication in accordance with the provisions of the Charter of the City of Lucas, and it is accordingly so ordained

DULY PASSED AND APPROVED BY THE CITY COUNCIL OF THE CITY OF LUCAS, COLLIN COUNTY, TEXAS, ON THIS 3rd DAY OF JUNE 2021.

APPROVED:

_____
Jim Olk, Mayor

APPROVED AS TO FORM:

_____
Joseph J. Gorfida, Jr., City Attorney
(05-25-2021:TM 122717)

ATTEST:

_____
Stacy Henderson, City Secretary

EXHIBIT "A"
LEGAL DESCRIPTION

WHEREAS, **PENNINGTON PARTNERS, LLC**, is the owner of a 5.65-acre tract out of the William Snider Survey, Abstract Number 821, situated in the City of Lucas, Collin County, Texas, being a part of a called 21.751-acre tract conveyed by Warranty Deed with Vendor's Lien of record in Document Number D20020606000809110 of the Official Public Records of Collin County, Texas, and being more particularly described by metes and bounds as follows:

BEGINNING, at a CIRS in the East line of a called 1.140-acre tract of land conveyed to O'Reilly Auto Enterprises, LLC by deed of record in Document Number 20171102001464850 of said Official Public Records, being the Northwest corner of Lot 1, Block A of Home Run Alley Addition, a subdivision of record in Document Number 20210309010000690 of the Plat Records of Collin County, Texas, and also being the Southwest corner hereof;

THENCE, N00°46'46"W, along the East line of said 1.140-acre tract, a distance of 86.99 feet to a 1/2" iron rod with plastic cap stamped "HUITT ZOLLARS" found at the Northeast corner of said 1.140-acre tract, also being the Southeast corner of Lot 1R, Block A of Lucas Plaza Addition, a subdivision of record in Document Number 20190124010000390 of said Plat Records;

THENCE, N00°54'46"W, along the East line of said Lot 1R, Block A of Lucas Plaza Addition, a distance of 186.01 feet to a ½" iron rod found at the Northeast corner of said Lot 1R, also being the Southeast corner of Lot 1, Block A of Donald Alan Addition, a subdivision of record in Document Number 20191016010004490 of said Plat Records;

THENCE, N00°44'37"W, along the East line of said Lot 1, Block A of Donald Alan Addition, a distance of 105.27 feet to a CIRS at the Northwest corner hereof;

THENCE, N89°20'40"E, over and across said 21.751-acre tract along the North line hereof, a distance of 646.97 feet to a CIRS in the West Right-of-Way line of Allison Lane, being the East line of said 21.751-acre tract, and also being the Northeast corner hereof;

THENCE, S00°38'34"E, along the West Right-of-Way line of Allison Lane, also being the East line of said 21.751-acre tract a distance of 382.61 feet to a CIRS, being the Southeast corner hereof;

THENCE, S89°43'45"W, along the North line of said Home Run Alley Addition, a distance of 645.71 feet to the **POINT OF BEGINNING** and containing an area of 5.65 Acres, or (245,902 Square Feet) of land, more or less.

EXHIBIT "B"
SITE PLAN

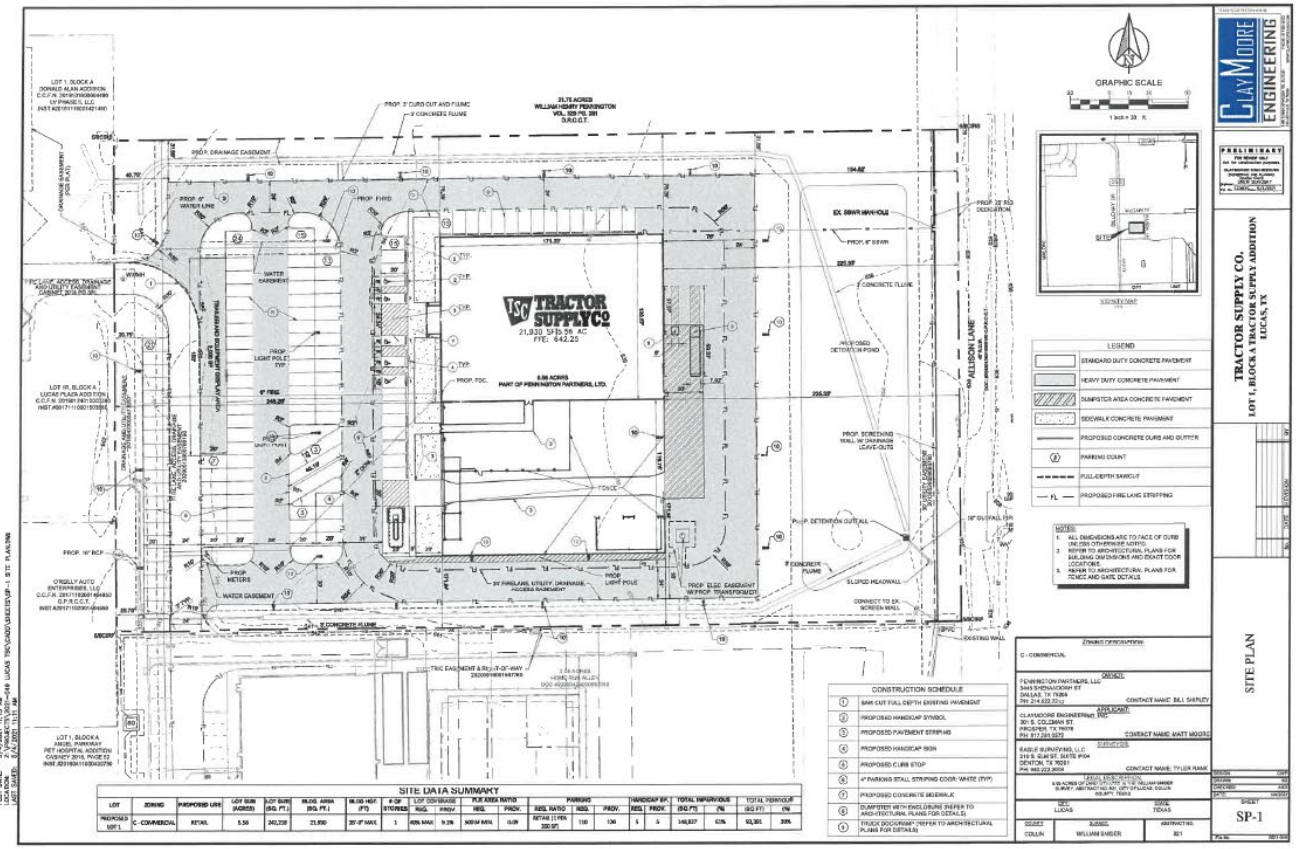

Exhibit "B"
City of Lucas
Ordinance # 2021-06-00933
Approved: June 3, 2021

EXHIBIT "C"
PHOTOMETRIC PLAN

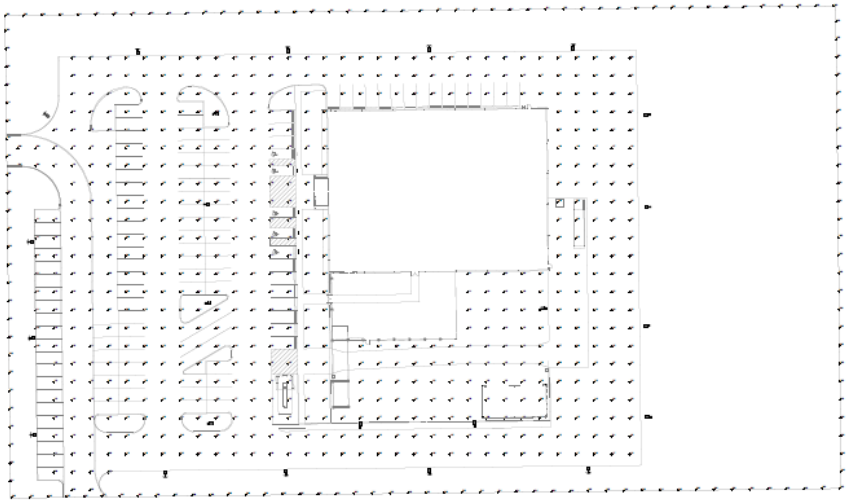

1 SITE PHOTOMETRIC PLAN

SCALE: 1/32"=1'-0"

N

STATISTICS

DESCRIPTION	SYMBOL	AVG	MAX	MIN
PROPERTY LINE	+	0.2	0.7	0.0
PARKING LOT	+	1.4	3.8	0.4

CYNERGY

THIS DOCUMENT IS
PRELIMINARY
IN NATURE AND IS NOT
A FINAL, SIGNED AND
SEALED DOCUMENT

TSC TRACTOR SUPPLY CO.

LUCAS, TX

ISSUE DATE:
CHECKED BY: MJR
DRAWN BY: JRM

SHEET NAME
ELECTRICAL PHOTOMETRIC PLAN

SHEET NUMBER
ES-102

Exhibit "C"
City of Lucas
Ordinance # 2021-06-00933
Approved: June 3, 2021

EXHIBIT "D"
ELEVATIONS PLAN

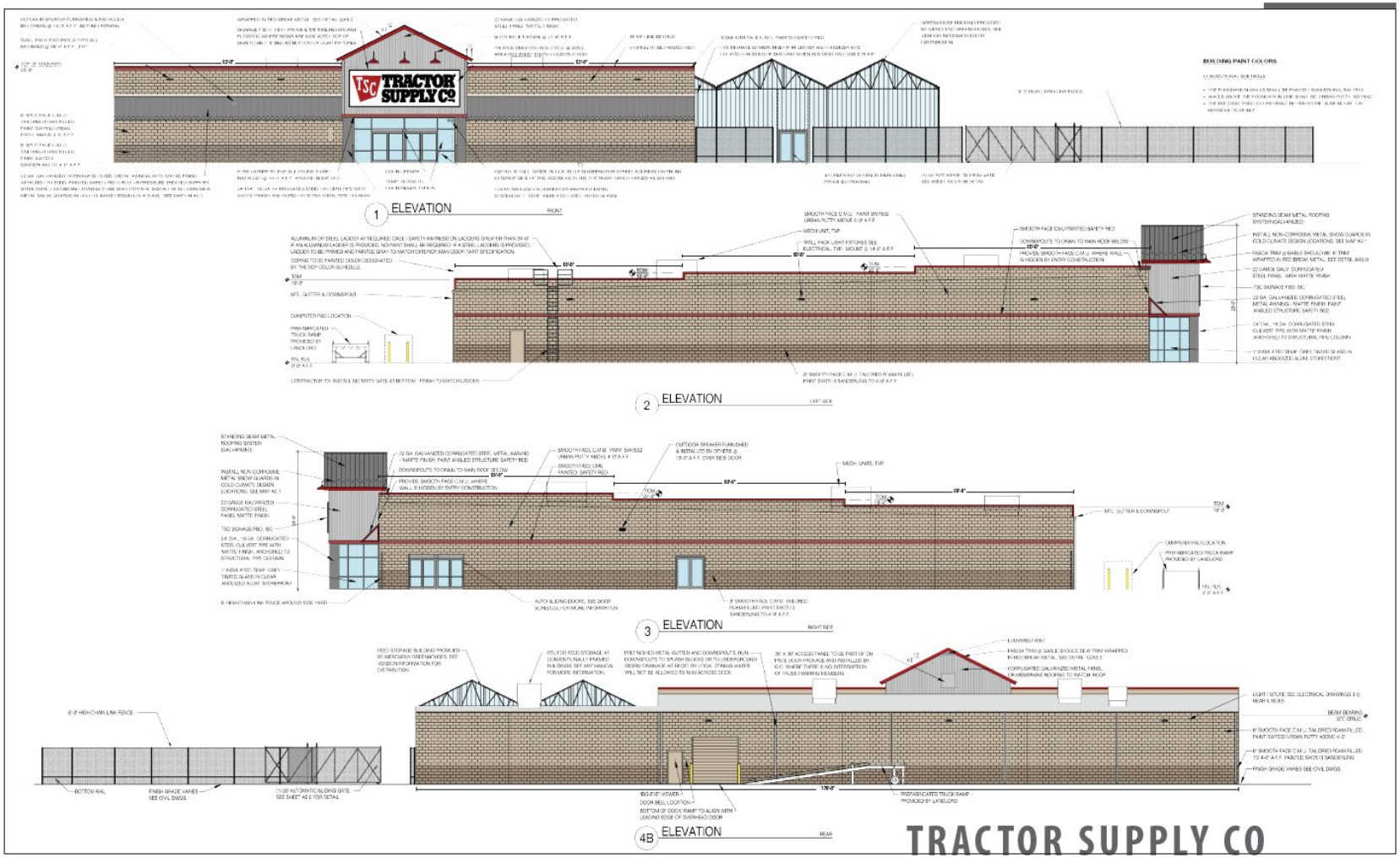

Exhibit "D"
City of Lucas
Ordinance # 2021-06-00933
Approved: June 3, 2021

EXHIBIT "E"
Landscape Plan

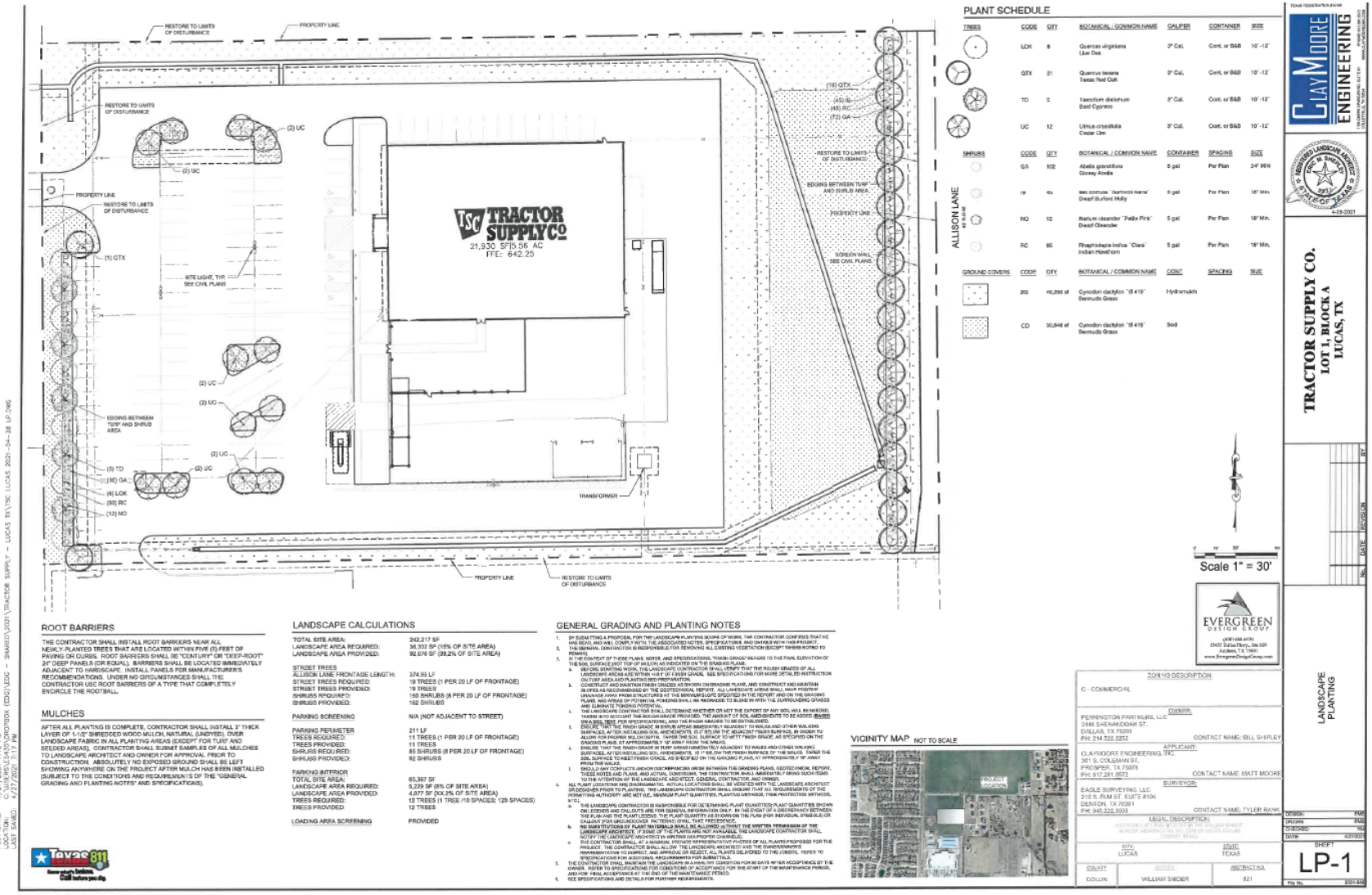

Exhibit "E"
City of Lucas
Ordinance # 2021-06-00933
Approved: June 3, 2021

Item No. 07

City of Lucas
City Council Agenda Request
June 3, 2021

Requester: Development Services Director Joe Hilbourn

Agenda Item

Consider the request by Stephen DiNapoli for preliminary plat approval for a parcel of land, being 41.512 acres, part of the John Thompson Survey, Abstract 893 and the G. Ducase Survey, Abstract 270 located on the northeast side of Winningkoff Road and north of Christian Lane, located at 950 Winningkoff Road, 970 Winningkoff Road, and 905 Christian Lane.

Background Information

This parcel of land is currently zoned R-2, containing 41.512 acres and proposes thirteen new residential lots. The average lot size is 2.78 acres, with 2 of those lots at 6 acres. The internal roads within the subdivision will be private streets, the private streets are dedicated as a separate lot to the HOA. The developer is adding easements to allow all of the lots within the subdivision to be able to access Trinity Trails. All of the drainage facilities including retention are located within drainage easements. The proposed water main is looped there are no demand water lines. A tree survey was completed for the project, an estimated 1127 inches of tree will have to be removed, there is potential for that number to rise. Tree mitigation will have to be done between construction improvements and final plat. Tree mitigation will through be landscaping the entrances and requiring each lot to plant the required number of trees at building final. The number that has to be mitigated will be established once development is complete.

Attachments/Supporting Documentation

1. Preliminary plat
2. Location Map
3. Tree Survey

Budget/Financial Impact

NA

Recommendation

Staff recommends approval of the preliminary plat. The Planning and Zoning Commission recommended approval of the preliminary plat by a 4 to 1 vote.

Item No. 07

City of Lucas
City Council Agenda Request
June 3, 2021

Motion

I make a motion to approve/deny the preliminary plat of a parcel of land being 41.512 acres of land part of the John Thompson Survey, Abstract 893 and the G. Ducase Survey, Abstract 270 located on the northeast side of Winningkoff Road and north of Christian Lane, located at 950 Winningkoff Road, 970 Winningkoff Road, and 905 Christian Lane.

VICINITY MAP
Scale: NTS

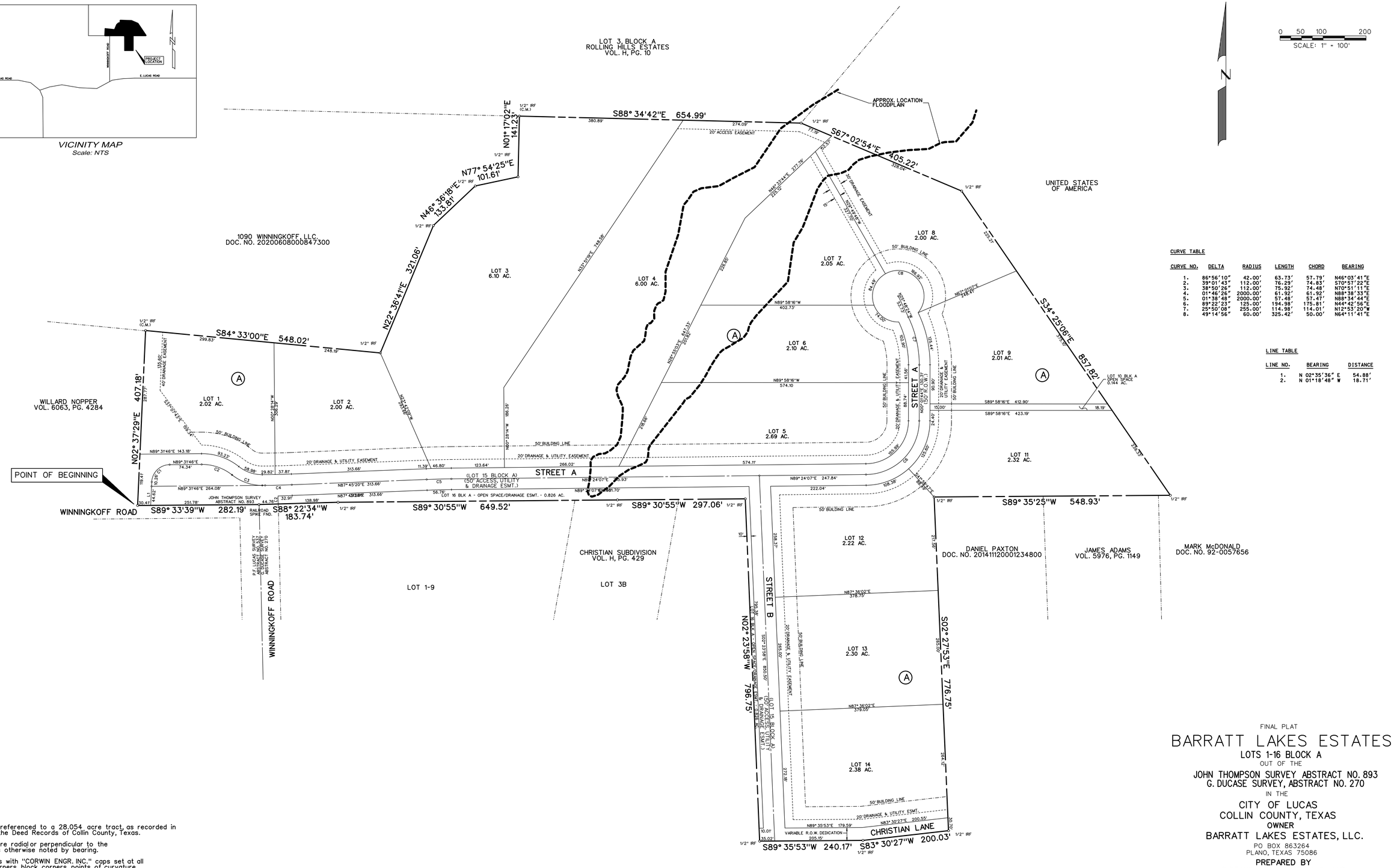

CURVE TABLE

CURVE NO.	DELTA	RADIUS	LENGTH	CHORD	BEARING
1.	86°56'10"	42.00'	63.73'	57.79'	N46°03'41"E
2.	39°01'43"	112.00'	76.29'	74.83'	S70°57'22"E
3.	38°50'26"	112.00'	75.92'	74.48'	N70°51'11"E
4.	01°46'26"	2000.00'	61.92'	61.92'	N88°38'33"E
5.	01°38'48"	2000.00'	57.48'	57.47'	N88°34'44"E
6.	89°22'23"	125.00'	194.98'	175.81'	N44°42'56"E
7.	25°50'08"	255.00'	114.98'	114.01'	N12°53'20"W
8.	49°14'56"	60.00'	325.42'	50.00'	N64°11'41"E

LINE TABLE

LINE NO.	BEARING	DISTANCE
1.	N 02°35'36" E	54.88'
2.	N 01°18'48" W	18.71'

NOTES

1. Bearing are referenced to a 28.054 acre tract, as recorded in Doc. No., in the Deed Records of Collin County, Texas.
2. All lot lines are radial or perpendicular to the street unless otherwise noted by bearing.
3. ½" iron rods with "CORWIN ENGR. INC." caps set at all boundary corners, block corners, points of curvature, points of tangency, and angle points in public right-of-way unless otherwise noted.
4. "Notice: Selling a portion of this addition by metes and bounds is a violation of city ordinance and state law and is subject to fines and withholding of utilities and building permits."
5. Lots or portions of lots within the floodplain or areas of special flood hazard require a development permit prior to issuance of a building permit or commencement of construction including site grading, on all or part of those lots.

TOTAL LOTS 13
TOTAL ACRES 41.512

FINAL PLAT

BARRATT LAKES ESTATES

LOTS 1-16 BLOCK A
OUT OF THE
JOHN THOMPSON SURVEY ABSTRACT NO. 893
G. DUCASE SURVEY, ABSTRACT NO. 270
IN THE
CITY OF LUCAS
COLLIN COUNTY, TEXAS

OWNER
BARRATT LAKES ESTATES, LLC.
PO BOX 863264
PLANO, TEXAS 75086

PREPARED BY
CORWIN ENGINEERING, INC.
TBPE FIRM #5951
TBPLS #10031700
200 W. BELMONT, SUITE E
ALLEN, TEXAS 75013
972-396-1200

APRIL 2021 SCALE: 1"=100'

DEDICATION

NOW THEREFORE, KNOW ALL MEN BY THESE PRESENTS:

THAT, BARRATT LAKES ESTATES, LLC., is the owner of the above-described project and does hereby adopt this plat designating the herein described property as BARRATT LAKES ESTATES, an addition to the City of Lucas, Texas, and does hereby dedicate to the public use forever the right-of-way, streets, easements, and alleys platted hereon.

This plat approved subject to all platting ordinances, rules, regulations, and resolutions of the City of Lucas, Texas.

EXECUTED this the_____ day of_____, 2021.

_____
Stephen Dinapoli
President

THE STATE OF TEXAS
COUNTY OF COLLIN

BEFORE ME, the undersigned, a Notary Public for the State of Texas, on this day personally appeared STEPHEN DINAPOLI, known to me to be the person whose name is subscribed to the foregoing instrument and acknowledged to me that the same is his act and deed in the capacity therein stated and for the purposes and considerations therein expressed.

WITNESS MY HAND AND SEAL OF OFFICE, this the_____ day of_____, 2021.

_____
NOTARY PUBLIC, STATE OF TEXAS

This plat is hereby approved by the Planning and Zoning Commission of the City of Lucas, Texas

_____ _____
Chairman, Planning and Zoning Commission Date

ATTEST:

_____ _____
Signature Date

_____
Name & Title

The Director of Public Works of the City of Lucas, Texas hereby certifies that to the best of his/her knowledge or belief, this subdivision plat conforms to all requirements of the Code of Ordinances and with engineering construction standards and processes adopted by the City of Lucas, Texas as to which his/her approval is required.

_____ _____
Director of Public Works Date

The Development Services Director of the City of Lucas, Texas hereby certifies that to the best of his/her knowledge or belief, this subdivision plat conforms to all requirements of the Code of Ordinances, or as may have been amended or modified, as allowed, by the Planning and Zoning Commission as to which his/her approval is required.

_____ _____
Development Services Director Date

LEGAL DESCRIPTION

WHEREAS, BARRAT LAKES ESTATES, LLC., is the owner of a tract of land situated in the John Thompson Survey, Abstract No. 893 and G. Ducase Survey, Abstract No. 270, being all of a 14.985 acre tract and a 14.088 acre tract, as described in Doc. No. 20210114000088080 in the Deed Records of Collin County, Texas, and a 4.417 acre tract, as described in 20210107000041130 in said Deed Records and a 8.0 acre tract, as described in Doc. No. in said Deed Records in being more particularly described as follows:

BEGINNING, at a PK nail set at the southwest corner of said 4.417 acre tract being in Winningkoff Road (Variable R.O.W.);

THENCE, North 02° 37'29" East, along the west line of said 4.417 acre tract, for a distance of 407.18 feet, to a 1/2 inch iron rod found at the northwest corner of said 4.417 acre tract;

THENCE, South 84° 33'00" East, along the north line of said 4.417 acre tract, for a distance of 548.02 feet, to a 1/2 inch iron rod found at the northeast corner of said 4.417 acre tract and being in the west line of said 14.088 acre tract;

THENCE, North 22° 36'41" East, along the west line of said 14.088 acre tract, for a distance of 321.06 feet, to a 1/2 inch iron rod found;

THENCE, North 46° 36'18" East, continuing along said west line, for a distance of 133.81 feet, to a 1/2 inch iron rod found;

THENCE, North 77° 54'25" East, continuing along said west line, for a distance of 101.61 feet, to a 1/2 inch iron rod found;

TEHNCE, North 01° 17'02" East, continuing along said west line, for a distance of 141.23 feet, to a 1/2 inch iron rod found at the northwest corner of said 14.088 acre tract;

THENCE, South 88° 34'42" East, along the north line of said 14.088 acre tract, for a distance of 654.99 feet, to a 1/2 inch iron rod found at the northeast corner of said 14.088 acre tract and the northwest corner of said 14.985 acre tract;

THENCE, South 67° 02'54" East, along the north line of said 14.985 acre tract, for a distance of 405.22 feet, to a 1/2 inch iron rod found;

THENCE, South 34° 25'06" East, continuing along said north line, for a distance of 857.82 feet, to the most easterly corner of said 14.985 acre tract, to a 1/2 inch iron rod found;

THENCE, South 89° 35'25" West, along the south line of said 14.985 acre tract, for a distance of 548.93 feet, to a 1/2 inch iron rod found at the northeast corner of said 8.0 acre tract;

THENCE, South 02° 27'53" East, departing said south line and with the east line of said 8.0 acre tract, for a distance of 776.75 feet, to a 1/2 inch iron rod found at the southeast corner of said 8.0 acre tract;

THENCE, South 83° 30'27" West, along the south line of said 8.0 acre tract, for a distance of 200.03 feet, to a 1/2 inch iron rod found;

THENCE, South 89° 35'53" West, continuing along said south line, for a distance of 240.17 feet, to a 1/2 inch iron rod found at the southwest corner of said 8.0 acre tract;

THENCE, North 02° 23'58" West, along the west line of said 8.0 acre tract, for a distance of 796.75 feet, to a 1/2 inch iron rod found at the northwest corner of said 8.0 acre tract being in south line of said 14.985 acre tract;

THENCE, South 89° 30'55" West, along the south line of said 14.985 acre tract, for a distance of 297.06 feet, at the southwest corner of said 14.985 acre tract and being the southeast corner of said 14.088 acre tract;

THENCE, South 89° 30'55" West, along the south line of said 14.088 acre tract, for a distance of 649.52 feet, to a 1/2 inch iron rod found;

THENCE, South 88° 22'34" West, continuing along said south line, for a distance of 183.74 feet, to a Railroad spike found at the southwest corner of said 14.088 acre tract and being the southeast corner of said 4.417 acre tract;

THENCE, South 89° 33'39" West, along the south line of said 4.417 acre tract, for a distance of 282.19 feet, to the POINT OF BEGINNING and containing 41.512 acres of land.

SURVEYOR'S CERTIFICATE

I, WARREN L. CORWIN, a registered Professional Land Surveyor in the State of Texas, do hereby certify that I prepared this plat from actual and accurate survey of the land and that the corner monuments shown thereon were properly placed, under my personal supervision, in accordance with the subdivision regulations of the City of Lucas, Texas.

_____
Registered Professional Land Surveyor
Registration No. 4621
Date:

THE STATE OF TEXAS
COUNTY OF COLLIN

Before me, the undersigned, a Notary Public in and for the State of Texas, on this day personally appeared WARREN L. CORWIN, known to me to be the person whose name is subscribed to the foregoing instrument, and acknowledged to me that he executed same for the purpose and consideration therein expressed.

Given under my hand and seal of office, this_____ day of_____, 2021.

_____
NOTARY PUBLIC, STATE OF TEXAS

FINAL PLAT

BARRATT LAKES ESTATES

LOTS 1-16 BLOCK A
OUT OF THE
JOHN THOMPSON SURVEY ABSTRACT NO. 893
G. DUCASE SURVEY, ABSTRACT NO. 270
IN THE
CITY OF LUCAS
COLLIN COUNTY, TEXAS

OWNER
BARRATT LAKES ESTATES, LLC.
PO BOX 863264
PLANO, TEXAS 75086

PREPARED BY
CORWIN ENGINEERING, INC.
TBPE FIRM #5951
TBPLS #10031700
200 W. BELMONT, SUITE E
ALLEN, TEXAS 75013
972-396-1200

APRIL 2021

Barratt Lake Estates

Location Map

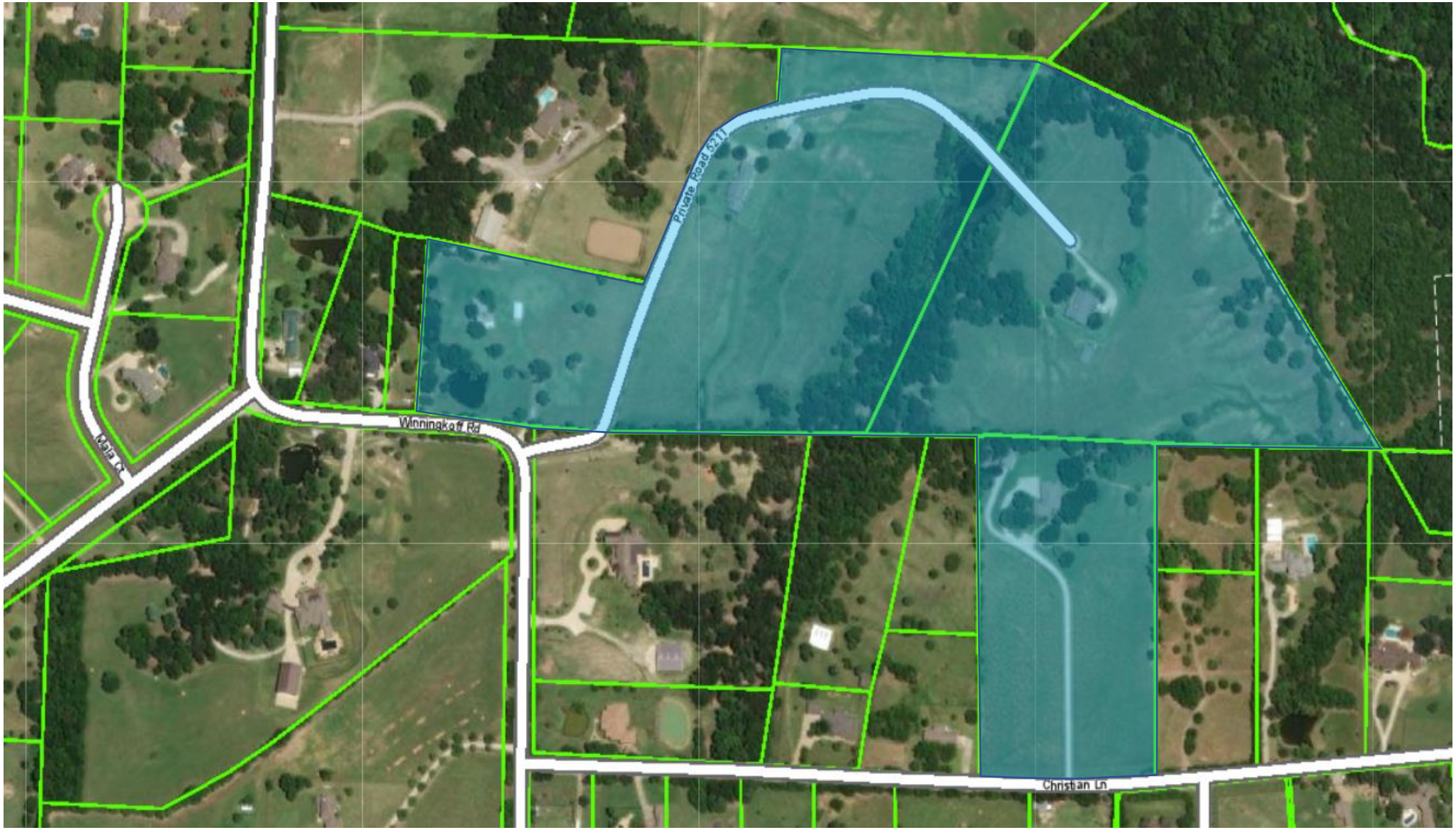

CORWIN ENGINEERING, INC.
200 W. BELMONT, SUITE E
ALLEN, TEXAS 75013 (972)396-1200
TBPE FIRM #5951

DEVELOPMENT PLANS FOR
BARRATT LAKE
ESTATES
LUCAS, TEXAS

TREE SURVEY

DRAWN BY	DESIGNED BY	CHECKED BY	SHEET NO.
JOB NUMBER 20013	DATE APRIL 2021	SCALE: 1"=80'	1

Tree Number	Diameter at Breast Height (Inches)	Species	Canopy Width (Feet)	Multiple Trunks	General Condition	Dead Branches (%)	Lean (%)	Fence in Trunk	Dead/ Missing Bark	Sapwood Damage/ Decay	Heartwood Damage/ Decay	Conks or Mushrooms	Cracks	
1	17.4	eastern red cedar	12	No	Healthy	0	61-90	No						Remove
2	12.5	cedar elm	13	No	Healthy	0	61-90	No						Remove
3	10.4	eastern red cedar	11	No	Healthy	0	61-90	No						Remove
4	13.9	eastern red cedar	11	Yes	Healthy	0	61-90	No						Remove
5	14.9	cedar elm	15	No	Healthy	0	61-90	No						Remove
6	11.2	eastern red cedar	10	No	Healthy	0	61-90	No						Save
7	16.7	eastern red cedar	16	Yes	Healthy	0	61-90	No						Save
8	10.4	sugarberry	12	No	Healthy	10	61-90	No						Save
9	9.2	eastern red cedar	7	No	Healthy	0	61-90	No						Save
10	11.1	cedar elm	11	No	Healthy	0	61-90	No						Save
11	12.3	sugarberry	17	No	Healthy	0	61-90	No						Save
12	4.9	western soapberry	6	No	Healthy	0	61-90	No						Save
13	6.4	sugarberry	5	No	Healthy	0	61-90	No						Save
14	14.4	eastern red cedar	14	No	Healthy	0	61-90	No						Remove
15	12.8	eastern red cedar	12	No	Damaged	30	61-90	No	Trunk	Trunk	Trunk			Remove
16	16.4	eastern red cedar	12	Yes	Damaged	35	61-90	No	Trunk	Trunk	Trunk			Remove
17	19.9	eastern red cedar	16	No	Healthy	0	61-90	No						Remove
18	24.3	eastern red cedar	15	No	Healthy	15	61-90	No						Remove
19	12.6	cedar elm	6	No	Damaged	85	61-90	No	Trunk	Trunk	Trunk			Remove
20	8.6	eastern red cedar	8	No	Healthy	0	61-90	No						Remove
21	12.5	cedar elm	15	No	Healthy	0	61-90	No						Remove
22	7.0	sugarberry	6	No	Damaged	30	61-90	No						Remove
23	24.8	eastern red cedar	19	Yes	Healthy	15	61-90	No						Remove
24	9.1	sugarberry	10	No	Damaged	30	61-90	No						Remove
25	13.9	eastern red cedar	9	No	Healthy	0	61-90	No						Remove
26	14.0	sugarberry	13	No	Damaged	50	61-90	No						Remove
27	8.9	cedar elm	8	No	Healthy	0	61-90	No						Remove
28	21.8	cedar elm	27	No	Healthy	0	61-90	No						Remove
29	23.9	eastern red cedar	19	Yes	Damaged	55	61-90	No						Remove
30	19.3	eastern red cedar	15	No	Damaged	30	61-90	No	Trunk	Trunk	Trunk	Trunk		Remove
31	25.3	eastern red cedar	20	Yes	Damaged	50	61-90	No	Trunk	Trunk	Trunk			Remove
32	15.0	cedar elm	19	No	Healthy	0	61-90	No						Remove
33	10.1	sugarberry	10	No	Healthy	20	61-90	No						Remove
34	13.1	cedar elm	18	No	Healthy	0	61-90	No						Remove
35	8.9	sugarberry	9	No	Healthy	0	61-90	No						Remove
36	14.9	cedar elm	18	No	Healthy	0	61-90	No						Remove
37	11.5	cedar elm	12	Yes	Healthy	0	61-90	No						Remove
38	32.7	cedar elm	27	Yes	Damaged	65	61-90	No	Branches & Trunk	Branches & Trunk	Branches & Trunk			Remove
39	5.0	sugarberry	5	No	Healthy	0	61-90	No						Remove
40	10.3	sugarberry	10	No	Healthy	0	61-90	No						Remove
41	7.1	sugarberry	9	No	Healthy	0	61-90	No						Remove
42	7.6	common persimmon	6	No	Damaged	10	61-90	No	Trunk	Trunk	Trunk			Remove
43	10.2	cedar elm	10	No	Healthy	15	61-90	No						Remove
44	10.8	sugarberry	11	No	Healthy	0	61-90	No						Remove
45	15.2	cedar elm	16	No	Healthy	0	61-90	No						Remove
46	17.3	cedar elm	20	No	Damaged	15	61-90	No	Trunk	Trunk	Trunk			Remove
47	9.2	cedar elm	9	No	Healthy	0	61-90	No						Remove
48	10.6	cedar elm	12	No	Healthy	0	61-90	No						Remove
49	9.8	eastern red cedar	10	No	Healthy	0	61-90	No						Remove
50	13.6	eastern red cedar	12	No	Healthy	15	61-90	No						Remove
51	9.9	cedar elm	11	No	Healthy	0	61-90	No						Remove
52	10.7	cedar elm	14	No	Healthy	0	61-90	No						Remove
53	16.8	cedar elm	16	No	Healthy	0	61-90	No						Remove
54	15.8	cedar elm	17	No	Damaged	0	61-90	No	Trunk	Trunk	Trunk			Remove
55	15.0	green ash	15	Yes	Healthy	0	61-90	No						Remove
56	12.4	green ash	12	No	Healthy	15	61-90	No						Remove
57	6.4	black willow	4	No	Healthy	0	61-90	No						Remove
58	33.9	black willow	20	Yes	Healthy	20	61-90	No						Remove
59	14.2	black willow	7	Yes	Healthy	0	61-90	No						Remove
60	17.5	sugarberry	20	No	Healthy	0	61-90	No						Remove
61	17.1	Osage-orange	16	No	Damaged	70	61-90	No	Branches & Trunk	Branches & Trunk	Branches & Trunk			Remove
62	18.3	eastern red cedar	16	No	Healthy	0	61-90	No						Remove
63	14.4	Bradford pear	9	No	Damaged	25	61-90	No	Branches & Trunk	Branches & Trunk	Branches & Trunk			Remove
64	6.8	western soapberry	7	No	Damaged	0	61-90	No	Branches & Trunk	Branches & Trunk	Branches & Trunk			Remove
65	8.6	western soapberry	6	No	Damaged	15	61-90	No	Branches & Trunk	Branches & Trunk	Branches & Trunk			Remove
66	8.7	eastern red cedar	10	No	Healthy	0	61-90	No						Save
67	21.3	eastern red cedar	18	Yes	Damaged	50	61-90	No	Branches & Trunk	Branches & Trunk	Branches & Trunk			Save
68	10.8	eastern red cedar	15	No	Healthy	0	61-90	No						Save
69	4.9	eastern red cedar	5	No	Healthy	0	61-90	No						Save
70	4.9	eastern red cedar	6	No	Healthy	20	61-90	No						Save
71	14.0	eastern red cedar	14	No	Damaged	95	61-90	No	Trunk	Trunk	Trunk			Save
72	7.4	eastern red cedar	8	No	Damaged	20	61-90	No	Branches & Trunk	Branches & Trunk	Branches & Trunk			Save
73	9.6	eastern red cedar	14	No	Damaged	0	61-90	No	Branches & Trunk	Branches & Trunk	Branches & Trunk			Save
74	9.1	eastern red cedar	15	No	Healthy	0	61-90	No						Save
75	11.7	eastern red cedar	18	No	Healthy	0	61-90	No						Save
76	11.4	eastern red cedar	18	No	Healthy	0	61-90	No						Save
77	7.8	eastern red cedar	12	Yes	Damaged	95	61-90	No	Branches & Trunk	Branches & Trunk	Branches & Trunk			Save
78	8.2	eastern red cedar	13	No	Healthy	0	61-90	No						Save
79	16.9	eastern red cedar	17	Yes	Healthy	20	61-90	No						Save
80	6.1	eastern red cedar	6	No	Healthy	0	61-90	No						Remove
81	20.2	eastern red cedar	18	No	Damaged	40	61-90	No	Trunk	Trunk	Trunk			Remove
82	5.5	eastern red cedar	7	No	Healthy	0	61-90	No						Remove
83	4.8	eastern red cedar	6	No	Healthy	0	61-90	No						Save
84	6.9	eastern red cedar	9	No	Healthy	0	61-90	No						Save
85	10.6	eastern red cedar	14	No	Healthy	0	61-90	No						Save
86	9.6	eastern red cedar	14	No	Healthy	0	61-90	No						Save
87	8.7	eastern red cedar	11	No	Healthy	0	61-90	No						Save
88	19.4	eastern red cedar	20	No	Healthy	20	61-90	No						Save
89	21.3	eastern red cedar	14	No	Damaged	70	61-90	No	Trunk	Trunk	Trunk			Save
90	8.4	honey-locust	8	No	Healthy	0	61-90	No						Remove
91	11.6	eastern red cedar	12	No	Healthy	0	61-90	No						Save
92	12.1	eastern red cedar	13	No	Healthy	0	61-90	No						Save
93	7.5	eastern red cedar	9	No	Damaged	95	61-90	No	Branches & Trunk	Branches & Trunk	Branches & Trunk			Save
94	8.4	eastern red cedar	14	No	Healthy	0	61-90	No						Save
95	8.8	eastern red cedar	12	No	Healthy	0	61-90	No						Save
96	23.8	cedar elm	27	Yes	Healthy	15	61-90	No						Save
97	8.8	eastern red cedar	8	No	Healthy	0	61-90	No						Save
98	7.4	eastern red cedar	12	No	Healthy	0	61-90	No						Save
99	6.7	eastern red cedar	8	No	Damaged	25	61-90	No	Branches & Trunk	Branches & Trunk	Branches & Trunk			Save
100	5.8	eastern red cedar	7	No	Healthy	0	61-90	No						Save
101	8.3	eastern red cedar	7	No	Healthy	0	61-90	No						Save
102	9.6	eastern red cedar	7	No	Healthy	0	61-90	No						Save
103	9.0	eastern red cedar	6	No	Damaged	50	61-90	No	Trunk	Trunk	Trunk			Save
104	10.6	eastern red cedar	8	No	Healthy	0	61-90	No						Remove
105	7.0	eastern red cedar	5	No	Damaged	40	61-90	No	Trunk	Trunk	Trunk			Remove
106	8.2	eastern red cedar	5	No	Healthy	0	61-90	No						Remove
107	26.0	pecan	34	Yes	Healthy	15	61-90	No						Remove
108	16.0	eastern red cedar	12	Yes	Healthy	0	61-90	No						Remove
109	12.0	eastern red cedar	8	No	Healthy	0	61-90	No						Remove
110	5.6	eastern red cedar	5	No	Healthy	0	61-90	No						Remove
111	14.0	cedar elm	20	No	Healthy	0	61-90	No						Remove
112	8.1	cedar elm	11	No	Healthy	0	61-90	No						Remove
113	7.7	eastern red cedar	6	No	Healthy	0	61-90	No						Remove
114	14.6	cedar elm	17	No	Healthy	10	61-90	No						Remove
115	7.6	honey-locust	8	No	Healthy	0	61-90	No						Remove
116	10.8	cedar elm	10	No	Healthy	0	61-90	No						Remove
117	7.8	cedar elm	9	No	Healthy	0	61-90	No						Remove
118	7.7	sugarberry	8	No	Healthy	0	61-90	No						Remove
119	12.2	cedar elm	14	No	Healthy	0	61-90	No						Remove
120	12.7	cedar elm	12	No	Healthy	0	61-90	No						Remove
121	4.9	cedar elm	5	No	Healthy	0	61-90	No						Remove
122	8.6	cedar elm	8	No	Healthy	0	61-90	No						Remove
123	4.5	cedar elm	4	No	Healthy	0	61-90	No						Remove
124	4.6	green ash	6	No	Healthy	0	61-90	No						Remove
125	13.4	cedar elm	14	No	Healthy	0	61-90	No						Remove
126	9.8	cedar elm	10	No	Healthy	0	61-90	No						Remove
127	9.0	cedar elm	8	No	Healthy	0	61-90	No						Remove
128	15.6	green ash	12	No	Damaged	0	61-90	No	Trunk	Trunk			Trunk	Remove
129	5.7	cedar elm	5	No	Healthy	0	61-90	No						Remove
130	7.7	cedar elm	7	No	Healthy	0	61-90	No						Remove
131	7.9	Osage-orange	5	No	Damaged	80	61-90	No	Branches & Trunk	Branches & Trunk	Branches & Trunk			Remove
132	9.1	Osage-orange	7	No	Damaged	50	61-90	No	Branches & Trunk	Branches & Trunk	Branches & Trunk			Remove
133	15.4	cedar elm	16	No	Healthy	0	61-90	No						Remove
134	9.3	cedar elm	9	No	Damaged	15	61-90	No	Trunk	Trunk				Remove
135	16.8	cedar elm	16	No	Healthy	10	61-90	No						Remove
136	5.7	cedar elm	4	No	Healthy	0	61-90	No						Remove
137	19.5	cedar elm	18	Yes	Healthy	0	61-90	No						Remove
138	4.0	cedar elm	4	No	Healthy	0	61-90	No						Remove
139	2.3	cedar elm	2	No	Damaged	0	61-90	No	Trunk	Trunk				Remove
140	14.1	cedar elm	10	No	Damaged	95	61-90	Yes	Trunk	Trunk	Trunk			Save
141	12.9	cedar elm	10	No	Damaged	0	61-90	Yes	Trunk	Trunk	Trunk			Remove
142	19.8	cedar elm	23	No	Healthy	10	61-90	No						Remove
143	8.6	cedar elm	9	No	Healthy	0	61-90	No						Remove
144	5.7	sugarberry	6	No	Healthy	0	61-90	No						Remove
145	4.8	cedar elm	5	No	Healthy	0	61-90	No						Remove
146	5.2	cedar elm	6	No	Damaged	0	61-90	No	Branches & Trunk	Branches & Trunk	Branches & Trunk			Remove
147	7.0	green ash	7	No	Damaged	0	61-90	No	Trunk	Trunk	Trunk			Remove
148	10.2	Osage-orange	14	No	Damaged	30	61-90	No	Branches & Trunk	Branches & Trunk	Branches & Trunk			Remove
149	5.6	cedar elm	5	No	Healthy	0	61-90	No						Remove
150	12.7	cedar elm	12	No	Healthy	0	61-90	No						Save
151	4.0	cedar elm	4	No	Healthy	0	61-90	No						Save
152	11.9	cedar elm	10	No	Damaged	40	61-90	Yes						Remove
153	18.6	cedar elm	22	No	Healthy	0	61-90	No						Remove
154	4.2	cedar elm	5	No	Healthy	0	61-90	No						Save
155	14.3	Osage-orange	14	Yes	Damaged	40	0-30	No	Branches & Trunk	Branches & Trunk	Branches & Trunk			Save
156	4.1	cedar elm	4	No	Healthy	0	61-90	No						Save
157	3.1	cedar elm	3	No	Damaged	50	61-90	No						Remove
158	3.5	cedar elm	4	No	Healthy	0	61-90	No						Remove
159	3.2	cedar elm	3	No	Healthy	0	61-90	No						Remove
160	8.0	cedar elm	8	No	Healthy	0	61-90	No						Remove
161	5.8	cedar elm	6	No	Healthy	15	61-90	No						Remove
162	2.9	cedar elm	3	No	Healthy	0	61-90	No						Remove
163	5.1	cedar elm	4	No	Healthy	0	61-90	No						Remove
164	5.2	cedar elm	4	No	Healthy	0	61-90	No						Remove
165	9.7	cedar elm	9	No	Healthy	0	61-90	No						Remove
166	9.0	cedar elm	12	No	Healthy	15	61-90	No						Remove
167	2.7	cedar elm	3	No	Healthy	0	61-90	No						Remove
168	3.5	cedar elm	4	No	Healthy	0	61-90	No						Remove
169	4.5	cedar elm	4	No	Healthy	0	61-90	No						Remove
170	3.0	cedar elm	3	No	Healthy	0	61-90	No						Remove
171	4.0	cedar elm	4	No	Healthy	0	61-90	No						Remove
172	22.3	cedar elm	26	Yes	Healthy	0	61-90	No						Remove
173	10.8	cedar elm	10	No	Healthy	0	61-90	No						Remove
174	19.8	cedar elm	26	No	Damaged	25	0-30	No						Remove
175	12.1	cedar elm	13	No	Healthy	0	61-90	No						Save
176	15.7	cedar elm	18	No	Healthy	15	61-90	No						Save
177	19.9	cedar elm	23	No	Damaged	25	61-90	Yes						Save
178	5.4	eastern red cedar	5	No	Damaged	20	61-90	No	Trunk	Trunk	Trunk			Remove
179	7.8	cedar elm	9	No	Healthy	0	61-90	No						Remove
180	24.9	cedar elm	30	No	Healthy	15	61-90	No						Remove
181	7.3	cedar elm	6	No	Damaged	0	61-90	No	Trunk	Trunk				Remove
182	7.5	cedar elm	7	No	Healthy	0	61-90	No						Remove
183	6.9	cedar elm	8	No	Damaged	0	61-90	No	Trunk	Trunk				Remove
184	14.0	cedar elm	16	No	Healthy	0	61-90	No						Save
185	2.6	cedar elm	3	No	Healthy	0	61-90	No						Save
186	2.5	cedar elm	4	No	Healthy	0	61-90	No						Save
187	4.5	cedar elm	5	No	Healthy	0	61-90	No						Save
188	3.2	cedar elm	4	No	Healthy	0	61-90	No						Save
189	8.4	Osage-orange	7	No	Damaged	40	31-60	No	Branches & Trunk	Branches & Trunk	Branches & Trunk			Save
190	10.4	cedar elm	16	No	Healthy	0	61-90	No						Save
191	12.9	cedar elm	16	No	Healthy	0	61-90	No						Save
192	14.0	cedar elm	15	No	Healthy	0	61-90	No						Save
193	6.6	cedar elm	6	No	Healthy	0	61-90	No						Remove
194	5.1	cedar elm	5	No	Healthy	0	61-90	No						Remove
195	13.3	Osage-orange	14	Yes	Damaged	35	61-90	No	Branches & Trunk	Branches & Trunk	Branches & Trunk			Remove
196	14.3	cedar elm	15	No	Healthy	0	61-90	No						Remove
197	18.5	Osage-orange	15	No	Damaged	30	61-90	No	Branches & Trunk	Branches & Trunk	Branches & Trunk			Remove
198	4.1	cedar elm	4	No	Healthy	0	61-90	No						Remove
199	8.2	cedar elm	9	No	Healthy	0	61-90	No						Remove
200	11.4	cedar elm	10	No	Healthy	15	61-90	No						Remove
201	14.3	cedar elm	16	No	Healthy	0	61-90	No						Remove
202	13.4	cedar elm	17	No	Healthy	0	61-90	No						Remove
203	6.2	cedar elm	7	No	Healthy	0	61-90	No						Remove
204	20.5	cedar elm	29	No	Healthy	15	61-90	No						Remove
205	6.0	cedar elm	6	No	Healthy	0	61-90	No						Remove
206	10.1	green ash	11	No	Healthy	15	61-90	No						Remove
207	3.2	Eve's necklace	3	No	Healthy	0	61-90	No						Remove
208	14.1	Osage-orange	12	No	Damaged	45	61-90	No	Branches & Trunk	Branches & Trunk	Branches & Trunk			Remove
209	2.6	Eve's necklace	3	No	Healthy	0	61-90	No						Remove
210	6.8	sugarberry	7	No	Healthy	0	61-90	No						Remove
211	9.3	cedar elm	10.405	No	Healthy	8.20303	61-90	No						Remove
212	9.3	cedar elm	10.419	No	Healthy	8.21596	61-90	No						Remove
213	9.3	eastern red cedar	10.433	No	Healthy	8.22889	61-90	No						Remove
214	9.3	cedar elm	10.447	No	Healthy	8.24182	61-90	No						Remove
215	9.4	honey-locust	10.461	No	Healthy	8.25476	61-90	No						Remove
216	9.4	cedar elm	10.474	No	Healthy	8.26769	61-90	No						Remove
217	9.4	cedar elm	10.488	No	Healthy	8.28062	61-90	No						Remove
218	9.4	sugarberry	10.502	No	Healthy	8.29355	61-90	No						Remove
219	9.4	cedar elm	10.516	No	Healthy	8.30648	61-90	No						Remove
220	9.4	cedar elm	10.529	No	Healthy	8.31941	61-90	No						Remove
221	10.6	eastern red cedar	6	No	Damaged	75	61-90	No	Branches & Trunk	Branches & Trunk				Remove
222	12.3	eastern red cedar	10	No	Damaged	50	61-90	No	Branches & Trunk	Branches & Trunk				Remove
223	9.6	eastern red cedar	10	No	Healthy	0	61-90	No						Remove
224	7.6	cedar elm	7	No	Healthy	0	61-90	No						Remove
225	7.8	eastern red cedar	7	No	Healthy	0	61-90	No						Remove
226	12.1	cedar elm	15	No	Healthy	0	61-90	No						Remove
227	2.3	cedar elm	3	No	Healthy	0	61-90	No						Save
228	9.3	cedar elm	11	No	Healthy	20	61-90	No						Save
229	11.4	cedar elm	12	No	Healthy	0	61-90	No						Save
230	11.1	Osage-orange	12	Yes	Damaged	65	61-90	No	Branches & Trunk	Branches & Trunk	Branches & Trunk			Save
231	6.8	cedar elm	5	No	Damaged	0	61-90	Yes						Save
232	5.8	eastern red cedar	4	No	Healthy	0	61-90	No						Save
233	15.0	Osage-orange	14	Yes	Damaged	45	61-90	No	Branches & Trunk	Branches & Trunk	Branches & Trunk			Save
234	5.7	eastern red cedar	9	No	Healthy	0	61-90	No						Save
235	6.8	eastern red cedar	6	No	Healthy	0	61-90	No						Save
236	10.4	American elm	12	No	Healthy	0	61-90	No						Save
237	10.0	cedar elm	10	No	Healthy	0	61-90	No						Save
238	10.5	eastern red cedar	11	No	Healthy	0	61-90	No						Save
239	15.6	eastern red cedar	18	No	Healthy	0	61-90	No						Save
240	8.3	eastern red cedar	16	Yes	Healthy	0	61-90	No						Save
241	7.3	eastern red cedar	9	No	Healthy	0	61-90	No						Save
242	7.8	eastern red cedar	14	No	Healthy	0	61-90	No						Save
243	8.6	cedar elm	9	No	Damaged	50	61-90	Yes	Branches & Trunk	Branches & Trunk	Branches & Trunk			Save
244	9.9	eastern red cedar	14	No	Healthy	0	61-90	No						Remove
245	16.7	American elm	21	No	Healthy	20	61-90	No						Save
246	6.3	eastern red cedar	5	No	Healthy	0	61-90	No						Remove
247	8.1	cedar elm	6	No	Damaged	35	61-90	No						Remove
248	12.5	cedar elm	14	No	Healthy	20	61-90	No						Save
249	9.4	eastern red cedar	6	No	Damaged	0	61-90	No	Trunk	Trunk	Trunk			Remove
250	7.5	cedar elm	5	No	Damaged	25	61-90	No						Save
251	6.4	cedar elm	6	No	Healthy	0	61-90	No						Save
252	11.0	cedar elm	15	No	Healthy	0	61-90	No						Remove
253	7.6	eastern red cedar	4	No	Damaged	70	61-90	No	Trunk	Trunk	Trunk			Remove
254	14.5	cedar elm	10	No	Damaged	75	61-90	No	Trunk	Trunk	Trunk			Remove
255	7.0	cedar elm	8	No	Healthy	0	61-90	No						Remove
256	12.7	cedar elm	14	No	Healthy	0	61-90	No						Remove
257	15.4	cedar elm	15	Yes	Healthy	0	61-90	No						Remove
258	13.3	cedar elm	14	No	Healthy	0	61-90	No						Remove
259	5.5	eastern red cedar	7	No	Healthy	0	61-90	No						Remove
260	8.9	eastern red cedar	9	No	Healthy	0	61-90	No						Remove
261	4.3	cedar elm	5	No	Healthy	0	61-90	No						Remove
262	8.0	cedar elm	6	No	Healthy	0	61-90	No						Remove
263	11.6	cedar elm	14	No	Healthy	0	61-90	No						Remove
264	8.9	eastern red cedar	6	No	Healthy	0	61-90	No						Remove
265	10.4	Osage-orange	13	No	Damaged	80	61-90	Yes	Branches & Trunk	Branches & Trunk	Branches & Trunk			Remove
266	12.7	eastern red cedar	16	No	Healthy	0	61-90	No						Remove
267	4.6	cedar elm	4	No	Healthy	0	61-90	No						Remove
268	4.5	sugarberry	6	No	Healthy	0	61-90	No						Remove
269	8.6	sugarberry	9	No	Healthy	0	61-90	No						Remove
270	10.3	eastern red cedar	8	Yes	Damaged	40	61-90	No						Remove
271	13.0	sugarberry	12	No	Damaged	20	61-90	No						Remove
272	7.2	Osage-orange	10	No	Damaged	85	61-90	No	Branches & Trunk	Branches & Trunk	Branches & Trunk			Remove
273	10.6	eastern red cedar	14	No	Healthy	0	61-90	No						Remove
274	16.5	cedar elm	16	No	Healthy	0	61-90	No						Remove
275	13.1	cedar elm	7	No	Healthy	0	61-90	No						Remove
276	14.2	Osage-orange	14	Yes	Damaged	35	61-90	No	Branches & Trunk	Branches & Trunk	Branches & Trunk			Remove
277	24.7	eastern red cedar	15	Yes	Damaged	35	61-90	No						Remove
278	9.7	cedar elm	10	No	Healthy	15	61-90	No						Remove
279	33.5	live oak	26	Yes	Healthy	0	61-90	No						Remove
280	9.7	eastern red cedar	11	No	Healthy	0	61-90	No						Remove
281	6.0	eastern red cedar	7	Yes	Healthy	0	61-90	No						Remove
282	14.5	Osage-orange	14	Yes	Damaged	75	0-30	No	Branches & Trunk	Trunk	Branches & Trunk			Remove
283	6.2	eastern red cedar	9	No	Healthy	0	61-90	No						Remove
284	2.5	Eve's necklace	4	No	Healthy	0	61-90	No						Remove
285	12.0	Osage-orange	13	No	Damaged	75	0-30	No	Branches & Trunk	Branches & Trunk	Branches & Trunk			Remove
286	11.6	eastern red cedar	12	No	Healthy	0	61-90	No						Remove
287	4.5	eastern red cedar	5	No	Healthy	0	61-90	No						Remove
288	8.2	eastern red cedar	11	Yes	Healthy	0	61-90	No						Remove
289	5.2	eastern red cedar	6	No	Healthy	0	61-90	No						Remove
290	9.1	eastern red cedar	7	Yes	Healthy	0	61-90	No						Remove
291	7.4	eastern red cedar	9	No	Healthy	0	61-90	No						Remove
292	20.3	cedar elm	19	No	Damaged	35	61-90	Yes						Remove
293	15.2	eastern red cedar	13	Yes	Healthy	0	61-90	No						Remove
294	6.5	eastern red cedar	7	Yes	Healthy	0	61-90	No						Remove
295	5.7	eastern red cedar	6	No	Damaged	35	61-90	No	Trunk	Trunk	Trunk			Remove
296	8.7	eastern red cedar	12	No	Healthy	0	61-90	No						Remove
297	12.9	eastern red cedar	15	No	Healthy	0	61-90	No						Remove
298	17.5	eastern red cedar	13	Yes	Healthy	0	61-90	No						Remove
299	4.6	eastern red cedar	6	No	Healthy	0	61-90	No						Remove
300	6.4	eastern red cedar	8	No	Healthy	0	61-90	No						Remove
301	9.2	eastern red cedar	13	No	Healthy	0	61-90	No						Remove
302	39.8	Osage-orange	29	Yes	Damaged	50	61-90	No	Branches & Trunk	Branches & Trunk	Branches & Trunk			Remove
303	22.3	Osage-orange	16	Yes	Damaged	40	61-90	No	Branches & Trunk	Branches & Trunk	Branches & Trunk			Remove
304	6.2	eastern red cedar	8	Yes	Healthy	0	61-90	No						Remove
305	16.8	cedar elm	20	No	Healthy	0	61-90	No						Remove
306	20.2	Osage-orange	21	No	Damaged	40	61-90	No	Branches & Trunk	Branches & Trunk	Branches & Trunk			Remove
307	16.2	cedar elm	17	No	Healthy	0	61-90	No						Remove
308	17.1	eastern red cedar	17	No	Healthy	0	61-90	No						Remove
309	17.1	cedar elm	18	No	Healthy	0	61-90	No						Remove
310	14.0	cedar elm	16	No	Healthy	0	61-90	No						Save
311	8.3	cedar elm	10	No	Healthy	0	61-90	No						Remove
312	8.4	cedar elm	10	No	Healthy	0	61-90	No						Remove

CORWIN ENGINEERING, INC.
200 W. BELMONT, SUITE E
ALLEN, TEXAS 75013 (972)396-1200
TBPE FIRM #5951

DEVELOPMENT PLANS FOR
BARRATT LAKE ESTATES
LUCAS, TEXAS

TREE SURVEY

DRAWN BY	DESIGNED BY	CHECKED BY	SHEET NO.
JOB NUMBER 20013	DATE APRIL 2021	SCALE: 1"=80'	2

Item No. 08

City of Lucas
City Council Agenda Request
June 3, 2021

Requester: Assistant Fire Chief/Emergency Management Coordinator Lance Gant

Agenda Item Request

Consider approval of the Water Rescue Plan submitted by Lucas Fire-Rescue to develop a swift water and lake emergency response program.

Background Information

Lucas Fire-Rescue approached City Council regarding a request for budget funding to plan for swift water and lake emergency responses for the 2020/2021 fiscal budget year. At the Council's request a 10-year Water Rescue Plan has been developed.

The Water Rescue Plan was developed by Lucas Fire-Rescue to identify goals and resources to implement a water rescue program for the City of Lucas. The purpose of this is to help Lucas Fire-Rescue become proactive in its planning to improve emergency response at Lake Lavon such as expanding swift water rescue and emergency lake response capabilities. Lucas Fire-Rescue currently responds to lake emergencies in a limited capacity from the shorelines and relies on mutual-aid departments such as Wylie Fire-Rescue and Branch Volunteer Fire Department to respond to incidents on and in the water.

Attachments/Supporting Documentation

1. Water Rescue Plan

Budget/Financial Impact

Lucas Fire-Rescue has developed a 10-year budget plan to help achieve the goals set forth in the Water Rescue Plan. Following each year of the plan, Lucas Fire-Rescue will examine and consider reassessing any needs or operational changes.

Recommendation

Staff recommends City Council to consider the agenda item for LFR to continue to move forward with the plan to give LFR the lake response and water rescue capabilities. Additionally, with the approval of City Council, LFR will seek out grant opportunities to offset the costs outlined in the plan. If no grant is approved, LFR would like City Council to consider moving forward with the plan.

Item No. 08

City of Lucas
City Council Agenda Request
June 3, 2021

Motion

I make a motion to approve/deny the Water Rescue Plan submitted by Lucas Fire-Rescue developing a swift water and lake emergency response program.

WATER RESCUE PLAN

LUCAS FIRE-RESCUE
CITY OF LUCAS

EXECUTIVE SUMMARY OF WATER RESCUE PLAN

The *Water Rescue Plan* was developed by Lucas Fire-Rescue to identify goals and resources to implement a water rescue program for the City of Lucas, Texas. The purpose of this is to help Lucas Fire-Rescue become proactive in its planning to improve emergency response at Lake Lavon such as expanding swift water rescue and emergency lake response capabilities. Lucas Fire-Rescue currently responds to lake emergencies in a limited capacity from the shorelines and relies on mutual-aid departments such as Wylie Fire-Rescue and Branch Volunteer Fire Department to respond to incidents on and in the water. The *Water Rescue Plan* also analyzes response call data from an emergency incident at Lake Lavon showing faster response times of Lucas Fire-Rescue than that of mutual-aid departments. Although Lucas Fire-Rescue can respond to lake incidents, there are limited resources, training, and capabilities to actively respond in the water.

Lucas Fire-Rescue has developed five goals in the *Water Rescue Plan* to implement a water rescue program and improve emergency lake response calls:

Goal 1: Identify and obtain resources to improve water rescue emergency response.
Goal 2: Establish certified water rescue training and continuing education for personnel.
Goal 3: Improve overall response time and coordination to water rescue emergency calls.
Goal 4: Strengthen emergency lake response with surrounding cities and mutual aid.
Goal 5: Enhance emergency response capabilities during a disaster.

Resources are necessary to implement a water rescue program and Lucas Fire-Rescue has identified both internal and external resources in the *Water Rescue Plan*. A 10-year budget plan is also included to help show the costs for implementing and maintaining a water rescue program. The *Water Rescue Plan* is a document designed to be re-evaluated as priorities change in the future for Lucas Fire-Rescue to be proactive in improving emergency lake responses and continuing excellent essential public services.

PURPOSE OF WATER RESCUE PLAN

Lucas Fire-Rescue is exploring the opportunity to expand our emergency response capabilities by adding swift water rescue, flood and lake response to our capabilities and apparatus fleet. The purpose of the *Water Rescue Plan* is to establish a set of goals for developing a water rescue program and identifying the resources needed to accomplish the goals to improve emergency response on Lake Lavon. The *Water Rescue Plan* includes information regarding the current resources available to Lucas Fire-Rescue, identifies the needs to improve emergency response services, and develops a water rescue program by achieving short-term and long-term goals. The resources needed to develop a water rescue program include swift water rescue training, equipment, gear and, ultimately, a rescue boat to broaden emergency response services. The *Water Rescue Plan* is intended to provide an overview of a potential Lucas Fire-Rescue water rescue program with goals to improve emergency response on Lake Lavon.

BACKGROUND OF CURRENT WATER RESCUE OPERATIONS

The mission statement of Lucas Fire-Rescue is "to serve the citizens and business community of Lucas by preserving life, property, and the environment through education, prevention, public service, and emergency response." To accomplish this overarching task, Lucas Fire-Rescue has developed this *Water Rescue Plan* to expand swift water rescue and emergency lake response capabilities to improve lake emergency services and reduce response times on the northwest area of Lake Lavon. Currently, Lucas Fire-Rescue has limited water rescue response capabilities, training, equipment, and resources. This *Water Rescue Plan* will help Lucas Fire-Rescue identify the needs for training, equipment, and gear to respond to emergencies on Lake Lavon.

Lake Lavon covers an area of 21,400 acres with a shore length of 83 miles and is popular for recreational boating, fishing, hunting, and swimming. According to the United States Coast Guard 2019 Recreational Boating Statistics, Texas has the second highest distribution of boating deaths in the nation.

The City of Lucas borders the northwest portion of Lake Lavon (see Figure 1 to the right). Please refer to Appendix B for the full map of Lake Lavon in relation to surrounding municipal fire districts in Collin County.

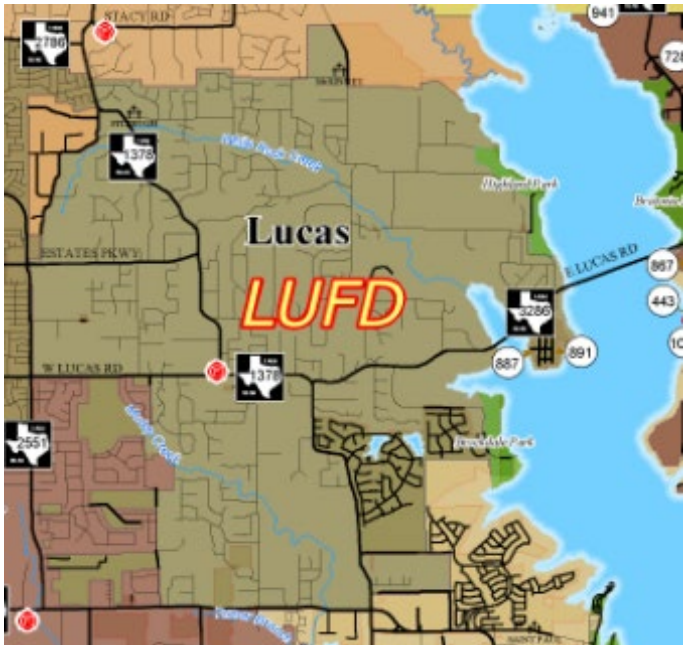

Figure 1: *Lucas Fire District Map to Lake Lavon*

Wylie Fire-Rescue currently provides lake response and boat tow operations on Lake Lavon. Wylie-Fire Rescue has lake response capabilities that cover areas of Lake Lavon up to East Lucas Road and to Brockdale Park boat ramp.

Branch Volunteer Fire Department also responds to lake emergencies depending on staffing and availability, and Princeton Fire Department has response capabilities north of Lake Lavon near Highway 380.

Currently, Lucas Fire-Rescue can respond to the Brockdale Park and Highland Park boat ramps and identify victims from the shore prior to the arrival of Wylie Fire-Rescue and/or Branch Volunteer Fire Department. To improve emergency response services on Lake Lavon, resources are necessary to expand Lucas Fire-Rescue capabilities from only being able to work on the shorelines to being able to respond to swift water rescue, flooding, and lake emergencies with rescue boat operations.

GOALS OF WATER RESCUE PLAN

The *Water Rescue Plan* outlines five goals with objectives to improve water rescue and emergency response services on Lake Lavon.

Goal 1: Identify and obtain resources to improve water rescue emergency response.

The goal is to identify the necessary resources needed to develop a water rescue program such as training, equipment, gear, and a rescue boat. Obtaining the resources will allow Lucas Fire-Rescue to work on improving emergency response related to swift water, flooding, and lake rescues. Lucas Fire-Rescue would be able to utilize the resources to develop a comprehensive training plan for swift water rescue and other education.

Goal 2: Establish certified water rescue training and continuing education for personnel.

The goal is to increase the personnel knowledge and awareness of water rescue operations and equipment. Creation of certified water rescue training will allow Lucas Fire-Rescue personnel to respond to water rescue emergencies on a technician level and during peak seasons. This could lead to the formation of a regional training seminar with neighboring cities bordering along Lake Lavon.

Goal 3: Improve overall response time and coordination to water rescue emergency calls.

The goal is to improve response times to water rescue emergencies after obtaining necessary resources and education. Coordination with other municipal fire departments to strengthen mutual aid water rescue and creating a process for automatic dispatch in CAD (Computer Aided Dispatch) will also help improve response time. In addition, Lucas Fire-Rescue could utilize assets on Lake Lavon during peak times such as during summer months and holiday weekends. An improvement to overall response time and coordination would allow faster response to lake emergencies during high peak usage at Lake Lavon.

Goal 4: Strengthen emergency lake response with surrounding cities and mutual aid.

The goal is to strengthen emergency lake response by developing a lake-wide system for dispatching with surrounding cities and dividing the lake into grids. Communication channels would include a radio, email, alerting system (Active911), and GPS pin locations. Lucas Fire-Rescue would work with Wylie Fire-Rescue, Branch Volunteer Fire Department, and Princeton Fire Department to improve quicker response options for lake emergencies. Lucas Fire-Rescue would also establish a dedicated lake emergency dispatch channel so the City of Wylie Dispatch Center and Collin County Dispatch Center can be patched together on an integrated system.

Goal 5: Enhance emergency response capabilities during a disaster.

The goal is to increase capabilities with swift water rescue and flood response especially during times of a disaster. Capabilities could be deployed regionally through mutual aid agreements with surrounding fire departments. By accomplishing the goals laid out in this *Water Rescue Plan*, Lucas Fire-Rescue would be able to fully utilize the training and resources when deployed in a flood zone or responding to water rescue related emergency. Lucas Fire-Rescue could be available as a statewide resource for the Texas Division of Emergency Management (TDEM), Texas Intrastate Fire Mutual Aid System (TIFMAS), or through a State of Texas Assistance Request (STAR).

DATA ANALYSIS OF RESPONSE CALLS TO LAKE LAVON

The City of Wylie Dispatch Center dispatches for Wylie Fire-Rescue and Lucas Fire-Rescue for lake emergencies. Branch Volunteer Fire Department relies on the Collin County Sheriff's Office Dispatch Center for lake emergencies which can further delay responses. Since 2018, there has been 43 lake emergency calls for service. These calls for service have been for search, rescue, emergency medical care, provide personnel, body recovery and investigations. Of the 43 calls, 14 calls have been either for the Brockdale Park boat ramp, Highland Park boat ramp, or areas within Lucas Fire-Rescue's extra-territorial jurisdiction (ETJ). Branch Volunteer Fire Department has been called for a total of 30 calls.

Lucas Fire-Rescue started collecting data related to emergency response calls to Lake Lavon in 2018. To better understand the needs of developing this *Water Rescue Plan*, Lucas Fire-Rescue has identified a gradual increase in lake emergency calls within three years. The three-year trend for Lucas Fire-Rescue service calls for lake emergency responses is shown in Figure 2. The emergency calls for service at Lake Lavon has steadily increase over three years.

2018	2019	2020
10	15	18

Figure 2: *3-Year Trend for Lucas Fire-Rescue Lake Emergency Calls*

In 2020, Lucas Fire-Rescue responded to six lake emergencies. Two of the six calls ended with two fatalities. In the fire service, this is considered to be low frequency/high risk incident type calls. In both instances, Lucas Fire-Rescue was dealing with a worst-case scenario.
These incidences occurred where Wylie Fire-Rescue was not immediately available to respond causing a considerable delay in response of appropriate resources. Branch Volunteer Fire Department's response times are similar as the department does not staff their station full-time. To provide a clearer understanding of mutual aid service calls in response to lake emergencies, Figure 3 on the following page details the dispatch and response times during an actual incident that occurred at Lake Lavon. The agencies involved included WEMS (Wylie EMS), WYFD (Wylie Fire Department), LFR (Lucas Fire-Rescue), and BVFD (Branch Volunteer Fire Department).

Agency	Arrival Order	Unit ID	Time Dispatched	Time Enroute	Time Arrived	Response Time
WEMS	4	MED990	10/23/2020 07:56:01	10/23/2020 08:00:37	10/23/2020 08:12:41	0:16:40
WYFD	6	BAT140	10/23/2020 07:56:01	10/23/2020 07:58:35	10/23/2020 08:22:00	0:25:59
WYFD	7	MAR143	10/23/2020 07:56:01	10/23/2020 08:04:14	10/23/2020 08:28:34	0:32:33
WYFD	7	RES143	10/23/2020 07:56:01	10/23/2020 08:04:12	10/23/2020 08:28:35	0:32:34
LFR	2	ENG861	10/23/2020 07:58:42	10/23/2020 07:58:42	10/23/2020 08:05:39	0:06:57
LFR	1	CHF860	10/23/2020 07:58:42	10/23/2020 07:58:42	10/23/2020 08:02:26	0:03:44
BFD	3	BRCHIEF1	10/23/2020 07:56:01	10/23/2020 08:06:05	10/23/2020 08:10:31	0:14:30
BFD	5	BRBOAT1	10/23/2020 07:56:01	10/23/2020 08:10:33	10/23/2020 08:15:51	0:19:50

Figure 3: *Emergency Response Dispatch Record of Lake Lavon Incident on October 23, 2020*

Figure 3 is a direct table embedded from Lucas Fire-Rescue's compilation of recorded dispatch times and response calls related to an incident that occurred on October 23, 2020. The location of this incident occurred off the Highland Park boat ramp where a person had fallen out their kayak and was in distress. Dispatch for the emergency call (highlighted in yellow) was first initiated by WEMS at 7:56 am. Lucas Fire-Rescue arrived on the scene first (highlighted in green) at 8:02 am and 8:05 am. Branch Volunteer Fire Department arrived second to the scene (highlighted in orange) at 8:10 am and 8:15 am. Wylie Fire-Rescue arrived last to the scene (highlighted in red) at 8:28 am, is approximately 32 minutes after the call was initially dispatched.

The data shows Lucas Fire-Rescue being the first to arrive to the scene in response to the lake emergency at approximately three and six minutes after dispatch is initiated. There is also approximately a 2.5-minute delay in dispatch as Lucas Fire-Rescue is not currently dispatched to lake emergencies due to absent water rescue capabilities. Lucas Fire-Rescue was able to only respond at the boat ramp and could not extend response onto Lake Lavon because of a lack of water rescue training, equipment, gear, and other resources. Lucas Fire-Rescue needs necessary water rescue training, gear, and equipment to improve emergency responses and effectively help those in distress at Lake Lavon.

RESOURCES FOR WATER RESCUE PROGRAM

City Resources

Currently, Lucas Fire-Rescue has four personal floatation devices and two throw rope bags on Engine 861 as our only sources of response capabilities. The lack of water rescue training and inventory greatly hampers our ability to respond to water emergencies to an almost non-existing capability. With the continual growth in the North Texas and Collin County area, the recreational activity along Lake Lavon will also increase. There are also additional factors in considering lake emergency response calls. If the City annexes the Highland Park and Brockdale Park boat ramps, Lucas Fire-Rescue's authority having jurisdiction (AHJ) will expand into those areas previously covered by Wylie Fire-Rescue.

Lucas Fire-Rescue will be responsible for boat tow operations. The emphasis of conducting boat tow operations is to recover a vessel before it becomes an actual emergency taking up more resources and time. A boat tow response is a boat that has no power or control and has no capability to return to its origin of departure and is not under any current emergency or distress. There may be financial recovery options available for the City with boat tow operations.

To meet the needs of this *Water Rescue Plan*, Lucas Fire-Rescue has examined the necessary assets of additional personal floatation devices, wet suits, water rescue helmets, gloves, boots, whistles, rescue tube, water rescue knives, strobe lights, throw rope bags and accessories, reach and rescue pole kit (including hooks, grabber, floatation collar and snare), and rescue sling shot for swift water rescue. To directly respond to lake emergencies, Lucas Fire-Rescue has also examined a need for a 22-foot rigid inflatable boat (see Appendix C for the sample boat design), radio equipment, night vision capabilities, rescue ropes, EMS equipment, and additional boat equipment.

The new resources acquired by the City will allow Lucas Fire-Rescue the capabilities for water rescue operations either within swift water response or lake emergency operations. By obtaining and utilizing the training, equipment, and resources, Lucas Fire-Rescue would be able to achieve the goals set forth in this *Water Rescue Plan*.

Shared Resources

Lucas Fire-Rescue's primary mutual aid for water response emergencies include Wylie Fire-Rescue and Branch Volunteer Fire Department. Wylie Fire-Rescue currently responds to lake emergencies in Marine 143 from Wylie Fire Station 3 located at 210 NWA Allen Blvd in Wylie. Wylie Fire-Rescue maintains their water rescue equipment at Station 3 and their timely response is contingent on personnel being in quarters. Wylie Fire-Rescue tows Marine 143 to Avalon Park where they traditionally launch their response.

While Branch Volunteer Fire Department does have water response capabilities, they are a volunteer fire department which is not staffed 24/7/365. Branch Volunteer Fire Department also obtains response from American Medical Response, Inc. (AMR) ambulance service through the County contract which can lead to a delay in EMS response.

Due to various municipalities and county adjacent to Lake Lavon, Lucas Fire-Rescue is not always notified of every lake incident in a timely manner. Wylie Fire-Rescue is currently responsible for emergency response on Lake Lavon, so distance of travel plays the biggest factor in their response. None of the equipment provided by Wylie Fire-Rescue or Branch Volunteer Fire Department is a shared asset with Lucas Fire-Rescue. If Wylie Fire-Rescue and Branch Volunteer Fire Department assets or personnel are on another call for service, there will be an extended delay.

If Lucas Fire-Rescue were to acquire a rescue boat to directly respond to lake emergencies, this would help increase a faster response time on the northwest side of Lake Lavon. Lucas Fire-Rescue would have the capacity to respond to boat emergencies, possible drownings, missing persons, or an EMS call for service without relying on the utilization of another department through mutual aid requests. Lucas Fire-Rescue is currently on the Wylie dispatch system so by improving our assets, training, and capabilities, it will allow Lucas Fire-Rescue to utilize that dispatch system to expedite our responses.

TRAINING FOR WATER RESCUE PROGRAM

Lucas Fire-Rescue currently has two personnel (one captain and one firefighter) who have had swift water rescue training. Both of their training opportunities were several years ago (eight and three years) and neither have had refresher courses. Lucas Fire-Rescue will be looking to add additional swift water rescue and rope rescue training to the Lucas Fire-Rescue training plan to increase the number of personnel with the required skills to respond to lake emergencies.

Due to an increase in lake emergency calls, Lucas Fire-Rescue would like to make swift water rescue and rope rescue training needs a priority within the department. Due to the size of our department, Lucas Fire-Rescue will ensure all full-time staff receive cross-training for water rescue emergencies.

Lucas Fire-Rescue will comply with future training needs based on the standards set by the National Fire Protection Association (NFPA) 1670 regarding Standard on Operations and Training for Technical Search and Rescue Incident and NFPA 1006 regarding Standard for Technical Rescue Personnel Professional Qualifications. The authority having jurisdiction (AHJ) shall establish levels of operational capability needed to conduct operations on technical search and rescue incidents, based on hazard identification, risk assessment, training level of personnel, and availability of internal and external resources.

The NFPA has three levels of certification for water rescue operations:

- Awareness Level – This is the current level of Lucas Fire-Rescue response capabilities. The awareness level allows personnel to recognize the need for a higher response but unable to take corrective actions, resulting in only incident survey and risk analysis for additional needs.

- Operations Level – This succeeds the awareness level and meets the requisite skills for rope rescue, water safety operator, assess moving water conditions, characteristics, and features in terms of hazards to the rescuer and victims given an incident scenario. The operations level allows shore or boat-based operations given a designated mission.

- Technician Level – This offers the most capability. It encompasses all the operations skills, as well as a full range of in-water contact rescue capabilities and full knowledge of technical rope rescue systems. Meets requisite skills for performing an entry rescue in the swift water and flooding environment given an incident scenario, rescue swimming techniques, proficient in water rescue PPE, and in water victim stabilization.

Lucas Fire-Rescue currently operates at an awareness level of response capabilities. This allows Lucas Fire-Rescue to recognize the need for technical rescue resources at an incident. The authority having jurisdiction (AHJ) gives Lucas Fire-Rescue guidelines for additional resources which is identified, the response system is initiated, the scene is secured and rendered safe until additional resources arrive, and awareness level personnel are incorporated into the operational plan.

Lucas Fire-Rescue intends to operate at the technician level for both surface water and swift water search and rescue incidents. The *Water Rescue Plan* lays out the required training plan for Lucas Fire-Rescue to succeed in earning that technician level. This would require Lucas Fire-Rescue personnel to attend area swift water rescue levels I and II courses provided through statewide agencies. This level of training will allow personnel to meet the job performance requirements for swift water and surface water rescues. Lucas Fire-Rescue would recommend all fire personnel to obtain swift water rescue training and to routinely take the course to be up to date on current practices and procedures.

BUDGET PLANNING FOR WATER RESCUE PROGRAM

Lucas Fire-Rescue has developed a 10-year budget plan to help achieve the goals of the *Water Rescue Plan*. Following each year of the plan, Lucas Fire-Rescue will examine and consider reassessing any needs or operational changes. The budget plan begins in fiscal year 2020-2021 where the City Council approved funding for swift water gear and training, and rope rescue training in the amount of $9,370.

To help show how Lucas Fire-Rescue would implement the water rescue program, the 10-year budget plan identifies costs for training, equipment, and a rescue boat. These resources are necessary to help meet the goals and implement a water rescue program for the City. The overall annual costs are broken down between training, equipment, and a rescue boat. Lucas Fire-Rescue would continue with personnel training to ensure staff obtains the technician certification for water rescue operations.

By fiscal year 2022-2023, Lucas Fire-Rescue anticipates enough staff would be certified in swift water rescue to adequately manage operations on a rescue boat during emergencies. Lucas Fire-Rescue has identified fiscal year 2022-2023 as the anticipated year to acquire a rescue boat with an estimated cost of $100,000. Lucas Fire-Rescue has researched various costs from several boat vendors to determine an approximate cost for a rescue boat. The estimated cost for annual maintenance of a rescue boat is also included each fiscal year after the acquisition.

Figure 4 below shows the 10-year estimated budget plan for a water rescue program beginning from fiscal year 2020-2021 to 2029-2030.

Lucas Fire-Rescue
Water Rescue Expense Estimates
Swift Water Rescue and Lake Emergencies

Planned Expenses	FY 20/21	FY 21/22	FY 22/23	FY 23/24	FY 24/25	FY 25/26	FY 26/27	FY 27/28	FY 28/29	FY 29/30	Total
Training/Travel Costs											
Subtotal	$4,170	$5,970	$6,170	$6,170	$6,170	$5,370	$5,370	$5,370	$4,970	$4,970	$54,700
Equipment Costs											
Subtotal	$5,200	$2,500	$10,000	$2,500	$1,700	$700	$1,700	$700	$700	$1,700	$27,400
Boat Cost											
Subtotal	$0	$0	$100,000	$1,000	$1,000	$1,000	$1,000	$1,000	$1,000	$1,000	$107,000
TOTALS											
Estimated Expenses	$9,370	$8,470	$116,170	$9,670	$8,870	$7,070	$8,070	$7,070	$6,670	$7,670	$189,100
***There is a 10% estimate in the total overall cost due to unforeseen or potential rising costs											$208,010

Figure 4: *10-Year Budget Plan for Water Rescue Program*

Lucas Fire-Rescue anticipates training costs to decrease in future years as personnel become certified as a technician in water rescue operations. Due to long range estimated costs, there is a 10% cost added to the total overall cost to anticipate unforeseen or potential rising costs. The total estimated cost for implementing and maintaining a water rescue program across ten years is $208,010.

CONCLUSION

The *Water Rescue Plan* provides guidance to Lucas Fire-Rescue in planning for proper training, equipment, gear, and a response boat for water rescue operations. Lucas Fire-Rescue developed goals in the *Water Rescue Plan* to help implement a water rescue program to improve emergency response and capabilities on Lake Lavon. Lucas Fire-Rescue has been responding to emergency calls from the shoreline at Lake Lavon and are unable to actively respond on the lake due to limited resources and training. Current response plans rely on nearby mutual-aid departments from Wylie Fire-Rescue and Branch Volunteer Fire Department. This dependency greatly hampers the response capabilities and response times to help people in distress or injured in areas near the City's extra-territorial jurisdiction. The data analysis indicate that Lucas Fire-Rescue can respond to areas in the water on the north side of the lake faster than the current responses from mutual-aid departments.

As population and recreational traffic continues to increase at the lake, Lucas Fire-Rescue anticipates an increase in accidents, deaths, and injuries on public waterways. It is important for Lucas Fire-Rescue to be proactive in implementing a water rescue program to ensure emergency response capabilities are readily available and sufficient during emergencies. The *Water Rescue Plan* addresses the needs for Lucas Fire-Rescue to implement a water rescue program to improve emergency lake response calls and to continue providing excellent essential public services to the public.

APPENDIX

A. 10-Year Budget Plan for Water Rescue Program

B. Collin County Fire Districts Map in Proximity to Lake Lavon

C. Boat Design and Specification Requirements

APPENDIX A
10-Year Budget Plan for Water Rescue Program

Lucas Fire-Rescue
Water Rescue Expense Estimates

Swift Water Rescue and Lake Emergencies

Planned Expenses	FY 20/21	FY 21/22	FY 22/23	FY 23/24	FY 24/25	FY 25/26	FY 26/27	FY 27/28	FY 28/29	FY 29/30	Total
Training/Travel Costs											
Swift Water Training (2 personnel)	$3,370	$3,370	$3,370	$3,370	$3,370	$3,370	$3,370	$3,370	$3,370	$3,370	$33,700
Rope Rescue (2 personnel)	$800	$800	$800	$800	$800	$800	$800	$800	$800	$800	$8,000
Boat Operator Course			$200	$200	$200						$600
Continual Education (CE's)											$0
OT for personnel training	$0	$1,800	$ 1,800	$1,800	$1,800	$1,200	$1,200	$1,200	$800	$800	$12,400
Subtotal	$4,170	$5,970	$6,170	$6,170	$6,170	$5,370	$5,370	$5,370	$4,970	$4,970	$54,700
Equipment Costs											
Swift Water Gear	$5,200										$5,200
Replacement Costs				$1,000			$1,000			$1,000	$3,000
Night Vision Googles		$2,500	$2,500								$5,000
Wireless Radios Headsets (2 sets)				$1,000	$1,000						$2,000
Ropes (tow, docking, anchoring)			$500		$500		$500		$500		$2,000
EMS Equipment (as needed)				$500		$500		$500		$500	$2,000
Boat Equipment					$200	$200	$200	$200	$200	$200	$1,200
Mobile Radio			$7,000								$7,000
Subtotal	$5,200	$2,500	$10,000	$2,500	$1,700	$700	$1,700	$700	$700	$1,700	$27,400
Boat Cost											
Lake Assault RHIB 22'			$100,000								$100,000
Maintenance/Fuel/Registration				$1,000	$1,000	$1,000	$1,000	$1,000	$1,000	$1,000	$7,000
Subtotal	$0	$0	$100,000	$1,000	$1,000	$1,000	$1,000	$1,000	$1,000	$1,000	$107,000
TOTALS											
Estimated Expenses	$9,370	$8,470	$116,170	$9,670	$8,870	$7,070	$8,070	$7,070	$6,670	$7,670	$189,100

*****There is a 10% estimate in the total overall cost due to unforeseen or potential rising costs** **$208,010**

APPENDIX B

Collin County Fire Districts Map in Proximity to Lake Lavon

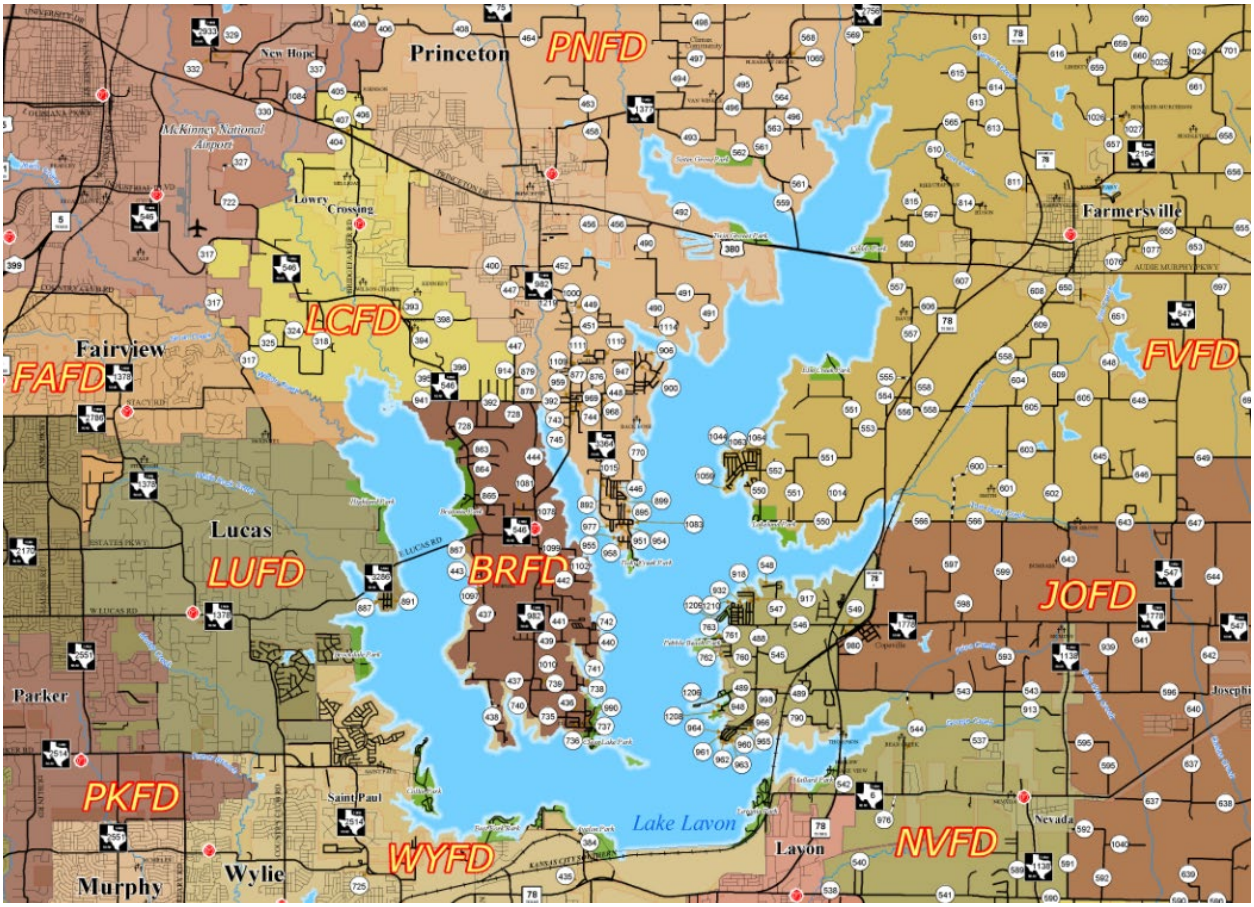

APPENDIX C
Rescue Boat Design and Specification Requirements

<u>Preliminary Spec 22’ x 8.5’ Rigid Inflatable Boat (RHIB) Based on Analysis</u>

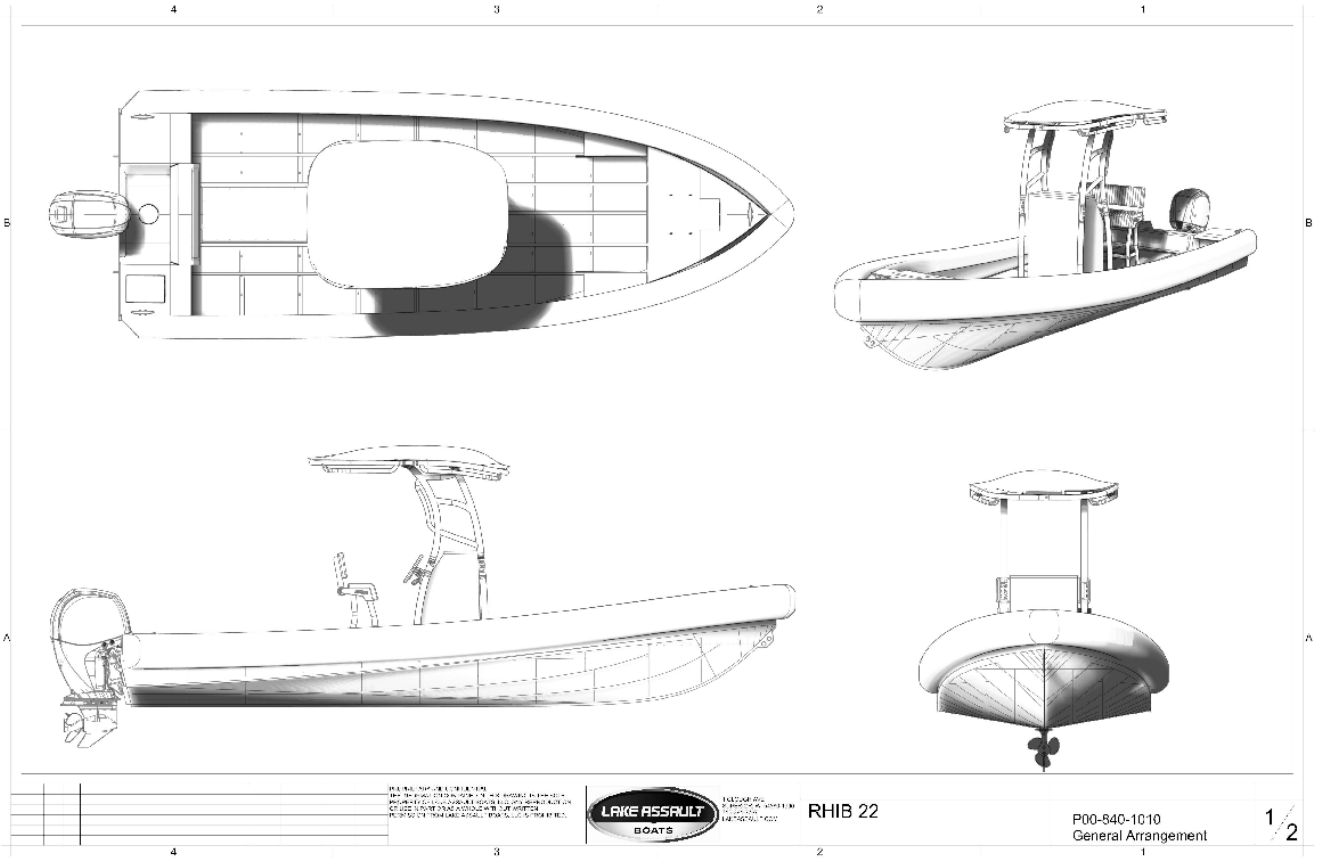

A. GENERAL SPECIFICATIONS:

1. Hull Length 22’ (does not include outboard engines or engine guard)
2. Beam 8 feet 6 inches (includes engine guard, or collar)
3. Overall height not to exceed 13’6” while on trailer and attached to a tow vehicle.
4. Draft should not exceed 12 inches with motors trimmed up and 18 inches with motor trimmed down.
5. Person and cargo capacity 2000 lbs. approx.
6. Boat weight 3100 lbs. approx.
7. Trailer weight 975 lbs. approx.
8. Combined boat and trailer weight 4075 lbs. approx.

B. HULL DESIGN & OUTFITTING:

1. Hull is modified “V” with 10-degree dead rise at the transom.

2. Deck is self-bailing and provides sufficient water egress.
3. There are sacrificial anodes attached to the hull for electrolysis protection.
4. A 1/2” aluminum double pad eye will be incorporated into the keel.
5. Three (3) 10” welded aluminum cleats.
6. Bottom plating .188” Aluminum alloy 5086-H116
7. Side plating .188” aluminum 5052.
8. Deck plating .188” 5052
9. There will be an Ionomer foam collar system around the gunwales of the boat to provide flotation and prevent hull damage with coming alongside of vessels or docks/piers.
10. One (1) 750GPH automatic bilge pump.
11. One (1) T-handle drain plug is provided.

C. WELDING:

1. The hull and superstructure are constructed of marine grade aluminum and MIG and TIG welded throughout.
2. All water seams are welded 100% on both sides.
3. Longitudinal and transverse structural members are stitch welded on opposite sides.

D. FUEL SYSTEM:

1. 48-gallon fuel tank. The tank is made of aluminum. The tank is internally baffled to prevent shifting of the fuel load, and to ensure fuel pickup tube remains submerged in fuel.
2. Fuel tank is EPA compliant and meets all venting and overflow safety requirements.
3. Withdrawal tube is stainless steel.

E. TOWING EQUIPMENT:

1. 316 Stainless TurboSwing motor guard.

F. T-TOP:

1. The T-top has a Sunbrella™ fabric top for protection from sun and rain. Interior clearance height is 82”. T-top folds forward for transport if desired. Rigid fiberglass T-top also available.
2. The dash console provides ample room for electronics, throttles, switches, steering wheel with hydraulic steering.
3. One (1) 12V red/white LED dome lights installed overhead above helm.
4. Padded leaning post.

G. ELECTRICAL SYSTEM:

1. The vessel's electrical system is 12VDC.
2. All electrical cable is marine grade tinned copper wire and labeled for each circuit.
3. Cables are routed in wire ways wherever possible. Cables are protected with rubber wherever exposed to potential damage.
4. All electrical cables are marked in accordance with the markings in electrical drawings and sized in accordance with the American Boat & Yacht Council recommendations.
5. All electrical switches are of a heavy-duty type toggles properly insulated.
6. The electrical system is grounded. The hull is not used as part of a galvanic feeding loop.
7. Wiring for radios, and all electronics are protected by a combined fuse/switch panel on the dash. Additional switches are provided for future expansion of the electrical system.
8. Power, circuit protection and control components are protected against the following: corrosion, excessive heat, excessive vibration, water spray and EMI and RFI. Serviceable components are accessible.

H. BATTERIES:

1. One marine battery is installed complete with battery switches.
2. ProMariner Prosport 6 onboard battery charger.
3. The battery is installed in a plastic battery tray below a deck hatch outboard of the T-top.

I. 12V DC ELECTRICAL AND ELECTRONICS:

1. One (1) Garmin 10" Touch Screen with GPS, SONAR with SideVu ClearVu and traditional sonar with mapping.
2. One Blue Seas 6 position distribution/fuse panel is installed on the console.
3. Navigation lights are installed to meet USCG requirements with hinging anchor light mast.

J. PROPULSION:

1. A single 200 HP, 20" shaft, 4 stroke outboard motor with stainless steel prop is provided. Complete with a fuel management system, power trim and tilt, harnesses.

K. PAINT AND GRAPHICS:

1. Deck area has 3M Safety-walk™ anti slip #710 material applied.
2. Hull is left natural aluminum finish.

L. EMERGENCY LIGHTING, SIREN, AND WORK LIGHTS:

1. Whelen Mini Justice light bar with red LEDs.

M. TRAILER:

1. Aluminum bunk trailer complete with surge brakes, spare tire, and tongue jack on trailer.
2. An adjustable bow stop and winch stand is provided with a manual winch and strap.
3. Trailer LED lights are submersible.

Item No. 09

City of Lucas
City Council Agenda Request
June 3, 2021

Requester: City Attorney Joe Gorfida

Agenda Item Request

Consider legislative bills that passed in the 87th Legislative session and provide direction to City Staff and City Attorney if needed.

Background Information

NA

Attachments/Supporting Documentation

NA

Budget/Financial Impact

NA

Recommendation

NA

Motion

NA

Item No. 10

City of Lucas
City Council Agenda Request
June 3, 2021

Requester: City Council

Agenda Item Request

Consider the appointment of Mayor Pro Tem to serve for a one-year period beginning June 3, 2021 and ending May 31, 2022.

Background Information

Per the City Charter, Section 3.10 (1) a Mayor Pro Tem shall be selected after each regular election of the City Council members and shall serve in the capacity of Mayor during their absence.

Attachments/Supporting Documentation

NA

Budget/Financial Impact

NA

Recommendation

NA

Motion

I make a motion to appoint _____ as Mayor Pro Tem to serve for a one-year period beginning June 3, 2021 and ending May 31, 2021.

Item No. 11

City of Lucas
City Council Agenda Request
June 3, 2021

Requester: Councilmember Debbie Fisher

Agenda Item Request

Review the City's submittal procedures and approval requirements relating to the platting process and provide direction to staff on any recommended amendments.

Background Information

The City's Code of Ordinances, Article 10.03 Subdivision and Development details procedures regarding the preliminary platting process and standards of approval.

Prior to the filing of a preliminary plat, a preapplication meeting is held between the developer and the Development Review Committee consisting of the Development Services Director and City Engineer to review preliminary drawings. The preapplication meeting is an opportunity to provide feedback to the developer regarding specific requirements for submittals, timelines, review the platting application checklist, and City requirements.

After the pre-application meeting, the developer will file a preliminary plat application including construction plans. When the construction plans are reviewed and comments addressed by the City Engineer, the preliminary plat is reviewed and when complete, placed on the agenda for the Planning and Zoning Commission. The Planning and Zoning Commission is required to act on the preliminary plat within 30 days from the date of when the original preliminary plat was officially filed.

The Ordinance Requirements for Platting outlines standards for approval and submittal requirements of preliminary plats. The City provides the requestor with a comprehensive application packet titled Preliminary and Final Plat Guide and Application outlining items needed for each type of plat.

Attachments/Supporting Documentation

1. Ordinance Requirements for Platting – Article 10.03 Subdivision and Development Ordinance
2. City of Lucas Preliminary and Final Plat Guide and Application

Budget/Financial Impact

NA

Recommendation

Provide direction to City Staff regarding any modifications to the submittal process or checklist relating to platting procedures.

Motion

NA

ORDINANCE REQUIREMENTS FOR PLATTING

ARTICLE 10.03 SUBDIVISION AND DEVELOPMENT ORDINANCE*

Division 1. General

Sec. 10.03.001 Title

This article shall be known and may be cited as "The City of Lucas Subdivision and Development Ordinance."

Sec. 10.03.002 Authority

This article is adopted under the authority of the city charter, and the constitution and laws of the state, including chapters 43, 212 and 242 of the Texas Local Government Code, as amended.

Sec. 10.03.003 Purpose; plat required

(a) The purpose of this article is to: (i) provide for the orderly, safe and healthy development of the land within the city; (ii) protect and promote the health, safety, morals and general welfare of the city; (iii) guide the future growth and development of the city; (iv) provide for the proper location and width of streets and building lines; (v) provide adequate and efficient transportation, streets, storm drainage, water, wastewater, parks, and open space facilities; (vi) establish reasonable standards of design and procedures for platting to promote the orderly layout and use of land, and to insure proper legal descriptions and monumenting of platted land; (vii) insure that public infrastructure facilities required by city ordinances are available with sufficient capacity to serve the proposed development; (viii) require the cost of public infrastructure improvements that primarily benefit the tract of land being platted be borne by the owners of the tract.

(b) Every owner of any tract of land situated within the corporate limits of the city or within the extraterritorial jurisdiction of the city who divides the tract in two or more parts to lay out a subdivision of the tract, including an addition to the city, to lay out a building lot, or other lots, or to lay out streets, alleys, squares, parks or other parts of the tract intended to be dedicated to public use or for the use of purchasers or owners of lots fronting on or adjacent to the streets, alleys, squares, parks, or other parts must have a plat of the subdivision prepared and approved according to this article. A division of a tract under this article includes a division regardless of whether it is made by using a metes and bounds description in a deed of conveyance or in a contract for a deed, by using a contract of sale or other executing contract, or by using any other method. A division of land does not include a division of land into parts greater than 5 acres, where each part has access and no public improvement is dedicated.

(Ordinance 2006-07-00567, sec. 1, adopted 7/7/06)

(c) The procedure for approving a plat requires a preliminary plat and final plat. Except as otherwise permitted, the approval of a preliminary plat by the planning and zoning commission and city council is required for the construction of public improvements on the property. The preliminary plat and the associated engineering plans for the property may be amended during construction, with only major changes requiring reapproval by the planning and zoning commission. Upon completion of the required public improvements, or the provision of an improvement agreement, the owner may submit a corrected final plat for the subdivision. Lots may be sold and building permits obtained after approval of the final plat by the planning and zoning commission, and the recording thereof. (Ordinance 2010-11-00668, sec. 1, adopted 11/4/10)

Sec. 10.03.004 Applicability

This article shall apply to all subdivisions of land within the corporate limits of the city, and all land outside the corporate limits that the city council may annex, and all land within the extraterritorial jurisdiction of the city to the full extent allowed by state law. (Ordinance 2006-07-00567, sec. 1, adopted 7/7/06)

Sec. 10.03.037 Procedure for preliminary plat

(a) Prior to the filing of a preliminary plat, the developer shall meet with the city staff. The purpose of the meeting is to familiarize the developer with the city's development regulations and the relationship of the proposed subdivision to the comprehensive plan. At such meeting, the general character of the development, the zoning, utility service, street requirements and other pertinent factors related to the proposed subdivision will be discussed.

(b) Prior to submission of a preliminary plat, the developer shall submit to the city construction and engineering plans for the public infrastructure improvements required for the proposed subdivision unless the approval of an improvement agreement has been requested. If the city does not approve of the use of an improvement agreement, engineering and construction plans for the required public infrastructure must be submitted by the developer and approved by the city engineer prior to approval of the preliminary plat.

(c) After the preapplication conference and completion of engineering and construction plans for all public infrastructure improvements, the developer shall file the required number of copies of the preliminary plat of the proposed subdivision with the development review committee, for submission to the planning and zoning commission, and include the required filing fees and tax certificates showing all taxes have been paid on the property being platted.

(d) The following notice shall be stamped on the face of each preliminary plat: “Preliminary Plat - for inspection purposes only, and in no way official or approved for record purposes.”

(e) Preliminary plats shall be distributed by city staff to city departments. The owner shall be responsible for the distribution of copies of the preliminary plats to the agencies listed below. The city staff shall give the owner and such agencies a specific date by which to return written responses. The owner and the agencies listed below shall be provided an opportunity to attend a developer/city staff conference for the purpose of notifying the developer of necessary corrections.

(1) Independent school districts affected by the plat (one copy).

(2) City utility departments (two copies).

(3) Public utility companies and franchise utility companies that serve or will provide service to the proposed subdivision (two copies).

(4) County commissioner and county public works director if the subdivision is outside the city limits (one copy each).

(f) The development review committee shall accumulate the comments of the city departments and agencies, and conduct a developer/city staff conference to report the comments and requested corrections to the developer. The developer shall be allowed to make comment or make required corrections and submit the corrected preliminary plat to the development review committee for submission to the planning and zoning commission. The corrected preliminary plat shall be submitted within thirty (30) days of the date the original preliminary plat was officially filed and prior to the meeting of the planning and zoning commission at which such preliminary plat is scheduled for consideration. Upon timely receipt, the planning and zoning manager shall submit the corrected preliminary plat to the planning and zoning commission.

(g) A written report shall be prepared by city staff and submitted to the planning and zoning commission stating the review comments of the preliminary plat noting any unresolved issues.

(h) Following review of the preliminary plat and other materials submitted in conformity with this article, the planning and zoning commission shall act on a preliminary plat, within thirty (30) days after the date the preliminary plat is officially filed. The planning and zoning commission may either: (i) approve the preliminary plat as presented; (ii) approve the preliminary plat with conditions; or (iii) disapprove the preliminary plat. If disapproved, the planning and zoning commission, upon written request, shall state the reasons for disapproval. A conditional approval shall be considered a disapproval until the conditions have been satisfied.

(i) The actions of the planning and zoning commission shall be noted on two (2) copies of the preliminary plat. One (1) copy shall be returned to the developer and the other retained in the files of the development review committee.

(j) The planning and zoning commission shall, in its action on the preliminary plat, consider the physical arrangement of the subdivision and determine the adequacy of the street and thoroughfare rights-of-way and alignment and the compliance of the streets and thoroughfares with the major thoroughfare plan, the existing street pattern in the area and with any other applicable provisions of the comprehensive zoning ordinance and comprehensive plan. The planning and zoning commission, based on city staff recommendations, shall also ascertain that adequate easements for proposed or future utility service and surface drainage are provided, and that the lot sizes and area comply with the comprehensive zoning ordinance and are adequate to comply with the minimum requirements for the type of sanitary sewage disposal proposed. All on-site sewage disposal systems shall meet the minimum standards required by the city plumbing code and the regulations of the county and of the state commission on environmental quality, or their successors.

(k) After approval of a preliminary plat by the planning and zoning commission, the development review committee shall forward the preliminary plat to the city council for consideration at the next available city council meeting.

(l) The city council shall act on the preliminary plat within thirty (30) days after the date the preliminary plat is approved by the planning and zoning commission or is considered approved by the inaction of the planning and zoning commission. A preliminary plat shall be considered approved by the city council unless it is disapproved within that period.

(m) Approval of a preliminary plat by the planning and zoning commission and/or the city council is not approval of the final plat but is an expression of approval of the layout shown subject to satisfaction of specified conditions. The preliminary plat serves as a guide in the preparation of a final plat.

(n) Expiration of preliminary plat approval. The approval of a preliminary plat expires 5 years after the date of city council approval unless a final plat is submitted and has received approval by the planning and zoning commission for the property within such period, or the period is extended by the planning and zoning commission upon written request of the owner. If the time period is not extended, or a final plat is not submitted and approved by the planning and zoning commission within the sixty-month period, the preliminary plat approval shall be null and void, and the owner shall be required to submit a new plat for the property subject to the then-existing zoning, subdivision and other regulations.

(o) Phased development. The preliminary plat shall indicate any phasing of the proposed development with a heavy dashed line. Each phase shall be numbered sequentially and in the proposed order of development. The proposed utility, street and drainage layout for each phase shall be designed in such a manner that the phases can be developed in numerical sequence. Thereafter, plats of subsequent units of such subdivision shall conform to the approved overall layout and phasing, unless a new preliminary plat is submitted. The planning and zoning commission and city council may impose such conditions upon the filing of the phases as deemed necessary to assure the orderly development of the city. Such conditions may include but are not limited to temporary street and alley extensions, temporary cul-de-sacs, turnarounds, and off-site utility extensions. Failure to indicate phasing of the proposed development in accordance with this section prohibits the approval of a final plat for such subdivision in phases.

(p) Effective period of preliminary plat approved for phased development. If a final plat has not been submitted and approved on at least one phase of the area covered by the preliminary plat 5 years after the date of preliminary plat approval, the preliminary plat shall expire and be declared null and void. If in the event that only a phase of the preliminary plat has been submitted for final plat approval, then the preliminary plat for those areas not final platted within two years of the date of preliminary plat approval shall expire and be declared null and void, unless an extension of time is granted by the planning and zoning commission. Any phase of a preliminary plat not receiving final plat approval within the period of time set forth herein shall expire and be declared null and void, and the owner shall be required to submit a new preliminary plat for approval which shall be subject to the then-existing zoning, subdivision and other regulations, and the payment of any applicable fees.

Sec. 10.03.038 Extension and restatement of expired preliminary plats

(a) Sixty (60) days prior to or following the lapse of approval for a preliminary plat, as provided in these regulations, the owner may request the commission to extend or reinstate the approval.

(b) In determining whether to grant such request, the commission shall take into account the reasons for lapse, the ability of the owner to comply with any conditions attached to the original approval and the extent to which newly adopted zoning and subdivision regulations shall apply to the preliminary plat. The commission may extend or reinstate the preliminary plat, or deny the request, in which instance the owner must submit a new preliminary plat application for approval.

(c) The commission may extend or reinstate the approval subject to additional conditions based upon newly enacted regulations such as are necessary to issue [insure] compliance with the original conditions of approval. The commission may also specify a shorter time for lapse of the extended or reinstated preliminary plat than is applicable to original preliminary plat approval.

Sec. 10.03.039 Standards for approval of preliminary plats

No preliminary plat shall be approved unless the following standards have been met:

(1) The engineering and construction plans for the required public infrastructure improvements have been submitted and approved by the city engineer, unless the approval of an improvement agreement has been requested and approved;

(2) Provision for installation and dedication of public improvements has been made; and

(3) The preliminary plat conforms to the applicable zoning and all other requirements of this article.

(Ordinance 2006-07-00567, sec. 1, adopted 7/7/06)

(4) (A) A tree survey, which identifies large trees with a DBH ("diameter at breast height" measured at 4.5 feet above grade) of four and one-half inches (4.5") or greater and small trees with a DBH of two inches (2") or greater, shall be submitted prior to submission of the engineering and construction plans. The tree survey shall include the species and caliper at DBH of each tree in a tabular form, with each tree identified by a number corresponding to a numbered tree on the tree survey site plan. The tree survey must denote which trees will be saved and which will be removed. (Ordinance 2006-07-00567, sec. 1, adopted 7/7/06; Ordinance adopting Code)

(B) The tree survey must be reviewed and approved by the planning and zoning commission prior to the preliminary plat being submitted and prior to staff approving the engineering and construction plans. The commission shall act on the tree survey within thirty (30) days after it is officially filed. If the commission does not approve the tree survey, that decision may be appealed to city council

for consideration at the next available city council meeting, and the city council shall act on the appealed tree survey within thirty (30) days after the date the tree survey was denied by the commission. Inaction by the city council within this period shall be considered as approval.

(C) The commission, or the council upon appeal, shall approve the tree survey if it finds and determines that the developer has made a good faith effort to save as many trees, 6" caliper or greater at DBH, as possible, given the subdivision layout, lot size, and topography of the proposed development.

(D) As part of the final plat application, the developer must submit to the planning department a spreadsheet that summarizes, for each lot, the number of trees that were to be saved per tree survey, as well as the number of trees to be saved that were lost during construction. The spreadsheet must denote the caliper inch and species of each tree saved, as well as for the trees to be saved, but lost during development. This will allow staff to verify how many replacement trees are needed for each lot at the building permit stage.

(Ordinance 2006-07-00567, sec. 1, adopted 7/7/06)

(E) Except as provided in section 3.18.005, no person, directly or indirectly, shall cut down, destroy, remove or move, or effectively destroy through damaging any protected tree situated on property regulated by article 3.18 without first obtaining a tree removal permit, unless otherwise specified in article 3.18. (Ordinance adopting Code)

(F) Then, prior to the final inspection in connection with a building permit, any tree(s) shown on the tree survey as being retained on the lot, and which is removed or lost during development of the lot or home, shall be replaced by the developer or builder by planting a tree or trees of equivalent caliper inches. The trees used as replacement trees must each have a caliper of at least one and one-half inches (1-1/2") and be container grown. Trees used as replacement trees must be from the large tree list found on the approved list in section 3.18.019 or approved by the planning and zoning manager. The replacement tree(s) must be planted on the same lot where the tree(s) it is replacing was, provided that the planning and zoning manager may approve placement of the tree(s) on another lot(s) in the subdivision, if he finds it to be in the public interest. (Ordinance 2006-07-00567, sec. 1, adopted 7/7/06; Ordinance adopting Code)

Sec. 10.03.040 Data requirement for preliminary plat

(a) The owner shall submit the required number of copies of the preliminary plat an [and] 8-1/2" x 11" and a 11" x 17" reduction of copies of the preliminary plat, as determined by the development review committee, to allow for the distribution of the proposed preliminary plat for review. Each copy of the preliminary plat shall be folded so that the title block for the subdivision may be read in the lower righthand corner. The preliminary plat shall be drawn to a scale of one-

inch equals one hundred feet (1" = 100') or larger on 24" x 36" sheet size. In cases of large developments which would exceed the dimensions of the required sheet at the 100-foot scale, preliminary plats may be submitted at a scale of one-inch equals two hundred feet (1" = 200') on multiple sheets, properly registered. (Ordinance 2006-07-00567, sec. 1, adopted 7/7/06)

(b) The preliminary plat shall contain or be accompanied by the following:

(1) The required number of copies of the preliminary plat and the approved engineering and construction plans for all public infrastructure improvements in accordance with the design standards of the city, to include all streets, water mains and services, sewer system and services, and drainage systems required to develop the proposed subdivision.

(Ordinance 2016-01-00827 adopted 1/7/16)

(2) The name, address and telephone number of the owner, the surveyor, and engineer responsible for the preparation of the final plat.

(3) The name of the subdivision, vicinity location map showing adjacent subdivisions, street names (which shall conform, whenever possible, to existing street names) and lot and block numbers in accordance with a systematic arrangement.

(4) An accurate boundary survey description of the property, with bearings and distances, referenced to survey lines, existing property descriptions and established subdivisions, and showing the lines of adjacent tracts, the layout, dimensions and names of adjacent streets and alleys and lot lines shown in dashed lines.

(5) Scale, north point, date, lot and block numbers.

(Ordinance 2006-07-00567, sec. 1, adopted 7/7/06)

(6) The name and location of adjacent subdivisions or unplatted tracts drawn to scale shown in dotted lines and in sufficient detail to accurately show the existing streets, alleys and other features that may influence the layout and development of the proposed subdivision. The abstract name and number, and name of the owner of the adjacent unplatted tracts shall be shown. (Ordinance 2016-01-00827 adopted 1/7/16)

(7) Exact location of lots, streets, public highways, alleys, parks and other features, with accurate dimensions in feet and decimal fractions of feet, with the length of radii and of arcs of all curves, internal angles, points of curvatures, length and bearings of the tangents, and with all other surveyor information necessary to reproduce the plat on the ground. Dimensions shall be shown from all angle points. All lots on building sites shall conform to the minimum standards for area, width and depth prescribed by the zoning district or districts in which the subdivision is located, and state the area size of each lot.

(8) Building setback lines and the location of utility easements.

(9) Topographic information showing contour lines with intervals up to one foot (1') indicating the terrain, the drainage pattern of the area, and the drainage basin areas within the proposed subdivision. Topographic information showing contour lines with intervals up to two (2) feet indicating the terrain, the drainage pattern of the area, and the drainage basin areas outside the boundaries of the proposed subdivision.

(10) The layout and dimensions of proposed storm drainage areas, easements and rights-of-way necessary for drainage within and outside the boundaries of the proposed subdivision.

(11) The location and purpose of all proposed parks or other areas offered for dedication to public use.

(12) The location of all existing property lines, buildings, sewer or water mains, storm drainage areas, water and wastewater facilities, fire hydrants, gas mains or other underground structures, easements of record or other existing features.

(13) The location, size and identification of any physical features of the property, including watercourses, ravines, bridges, culverts, existing structures, drainage or other significant topographic features located on the property or within one hundred fifty feet (150') of the proposed subdivision.

(14) Copy of any deed restrictions, restrictive covenants, special use permit or planned development district ordinance regulating the property.

(15) The angle of intersection of the centerlines of all intersecting streets which are intended to be less than ninety degrees (90°).

(16) In accordance with the city floodplain management regulations, of the Code of Ordinances, as amended, the floodplain and floodway lines and base flood elevations as shown on the current effective flood insurance rate maps for the city shall be shown, where applicable. A notation shall be shown on the face of the preliminary plat stating: "Lots or portions of lots within the floodplain or areas of special flood hazard require a development permit prior to issuance of a building permit or commencement of construction including site grading, on all or part of those lots."

(17) For a preliminary plat of land located outside the city limits where sanitary sewer does not exist or where street improvement standards vary from those specified by the city, such differences shall be noted.

(18) A certificate of ownership and dedication of all streets, alleys, easements, parks and other land intended for public use, signed and acknowledged before a notary public by the owner and lienholders of the property, along with complete and accurate metes and bounds description of the land subdivided and the property dedicated to public use.

(19) Receipt showing all taxes on the subject property are paid.

(20) Certification by a surveyor, to the effect that the preliminary plat represents a survey made by the surveyor, and that all the necessary survey monuments are correctly shown thereon.

(21) A preliminary plat provided in multiple sheets shall include a key map showing the entire subdivision at smaller scale with lot and block numbers and street names on one (1) of the sheets or on a separate sheet of the same size.

(Ordinance 2006-07-00567, sec. 1, adopted 7/7/06)

(22) Copy of any proposed property owner or homeowners' association agreements, covenants and restrictions. (Ordinance 2016-01-00827 adopted 1/7/16)

Sec. 10.03.041 Effect of preliminary plat approval

Approval of a preliminary plat by the commission and city council constitutes authorization for the city engineer to release construction plans and to permit the owner to commence construction of the public improvements. Approval of a preliminary plat also authorizes the owner, upon fulfillment of all requirements and conditions of approval, to submit a final plat for approval. Upon release of the construction plans, the city engineer may, upon request of the applicant, issue a certificate indicating the construction plans have been released and construction of the improvement is thereafter authorized. The certificate shall read as follows:

> "The Preliminary Plat for (insert name of the subdivision or addition) as approved by the City Council for the City of Lucas on (insert date of approval) is authorized for use with engineering plans for the construction of public improvements as approved by the City Engineer. A Final Plat shall be approved by the Planning and Zoning Commission upon the completion of all public improvements or the provision of an Improvement Agreement under the terms of the Subdivision and Development Ordinance and submission of a Final Plat in compliance with the Subdivision and Development Ordinance of the City of Lucas."

2018

Preliminary and Final

Plat Guide and Application

City of Lucas

665 Country Club Road
Lucas Texas 75002

Office 972-912-1207
www.lucastexas.us

Office Use Only:
Date Received
Received by

APPLICATON

Name of Subdivision and/or Project: _____

ITEMS SUBMITTED	Filing Fee
☐ **Preliminary Plat**	
▪ Single Family Residential Subdivision Development o $750 + $5 per acre with 20 acres or less (i.e. $850 for 20 acres) excluding minor plats of five (5) acres or less. o $750 + $5 per acre with 21-30 acres (i.e. $900 for 30 acres) o $800 + $5 acre with 31-45 acres (i.e. $1025 for 45 acres) o $900 + $5 per acre with 46+ acres (i.e. $1130 for 46 acres)	_____
▪ Estate Residential Subdivision Development o $1000 + $7 per acre for all size parcels (i.e. $1140 for 20 acres)	_____
▪ Minor Plats o $500 + $5 per acre with 5 acres or less (i.e. $525 for 5 acres)	_____
▪ Non-residential District Plats o $800 + $10 per acre with 30 acres or less o $850 + $10 per acre with 31 – 45 acres o $950 + $10 per acre with 46+ acres	_____
☐ **Final Plat**	
▪ Single Family Residential Subdivision Development o $800 + $5 per acre with 30 acres or less o $850 + $5 per acre with 31 – 45 acres o $950 + $5 per acre with 46+ acres *Any additional development fees will be charged at final plat rates.*	_____
▪ Estate residential Subdivision Development o $950 + $7 per lot for all size parcels	_____
▪ Minor Plat o $350 + $5 per acre with 5 acres or less	_____
▪ Non-residential District Plats o $850 + $10 per acre for up to 30 acres o $900 + $10 per acre with 31 – 45 acres o $1000 + $10 per acre with 46+ acres	_____
▪ Replat o Minor Plat (5 acres or less) $450 + $5 per acre ($475 for 5 acres) o All others - $600 + $10 per acre	_____
▪ Amended Plat o Minor Plats (5 acres or less) - $300 + $7 per acre (i.e. $300 for an amended plat for 5 acres) o All others - $500 + $10 per acre (i.e. $700 for an amended plat for 20 acres)	_____
☐ **Storm Water Run-Off Permit** o Developments 0 – 3 acres $75.00 o Developments 4 – 10 acres $150.00 o Developments 10 acres and above $500.00	_____
☐ **Vacation of Plat** o $500 + $10 per acre	_____
☐ **Concept Plan (Optional Land Study)** o $150 per session with Planning & Zoning and/or Council	_____
☐ **Tree Survey/Conservation Plan**	**N/A**
☐ **Tree Removal & Site Clearing Permit** o $ 250	_____
☐ **Park Site Dedication** o $ 1,000 per lot or land dedication per Lucas City Ordinance Sec. 10.01.122	_____

APPLICATON, cont.

Physical Location of Property: _____
(Address and General Location – approximate distance to nearest existing street corner)

Brief Legal Description of Property (must also attach accurate metes and bounds description):
_____
(Survey/Abstract No. and Tracts; or platted Subdivision Name with Lots/Block)

Comprehensive Zoning Designation/s: _____

Existing Zoning Designation/s: _____

Description of Project Uses: _____

Acreage: _____ Existing # of Lots/Tracts: _____

OWNER'S NAME: _____ Contact Phone: _____

Applicant/Contact Person: _____ Title: _____

Company Name: _____

Street/Mailing Address: _____

Phone: (_____) _____ Fax: (_____) _____ Email: _____

OWNER'S NAME: _____ Contact Phone: _____

Applicant/Contact Person: _____ Title: _____

Company Name: _____

Street/Mailing Address: _____

Phone: (_____) _____ Fax: (_____) _____ Email: _____

ENGINEER/REPRESENTATIVE': _____

Applicant/Contact Person: _____ Title: _____

Company Name: _____

Street/Mailing Address: _____

Phone: (_____) _____ Fax: (_____) _____ Email: _____

APPLICATON, cont.

Name of Subdivision or Project: _____ cont.

ALL APPLICATIONS MUST BE COMPLETE, ACCOMPANIED BY THE APPLICABLE CHECKLIST AND TAX CERTIFICATE SHOWING TAXES PAID, BEFORE THEY WILL BE SCHEDULED FOR P&Z AGENDA. It is the applicant's responsibility to be familiar with, and to comply with, all City submittal requirements (in the Zoning & Subdivision Ordinances, and any separate submittal policies, requirements and/or checklists that may be required from City staff), including the number of plans to be submitted, application fees, etc. Please contact City staff in advance for submittal requirements. [Drawings will not be returned to applicant.]

ALL PARCELS/PROPERTIES MUST MATCH IN ACREAGE ALL OTHER DOCUMENTS SUBMITTED WITH NO AMBIGUITY.

SUBMISSIONS: Failure to submit all materials to the City with this application will result in delays scheduling the agenda date.

NOTICE OF PUBLIC RECORDS: The submission of plans/drawings with this application makes such items public record, and the applicant understands that these items may be viewed by the general public. Unless the applicant expressly states otherwise in writing, submission of this application (with associated plans/drawings) will be considered consent by the applicant that the general public may view and/or reproduce (i.e., copy) such documents.

****READ BEFORE SIGNING BELOW:** If there should be more than one property owner complete a separate sheet with the same wording as below. The City requires all Original Signatures. If applicant is other than the property owner a "Power of Attorney" with original, notarized signatures are required. (Notaries are available)

ITEMS REQUIRED PRIOR TO FINAL PLAT APPROVAL:

- Applicant agrees to pay any and all monies due to the City including but not limited to Park Site fee, Tree Removal Permit fee, 3% of Construction cost (developer to provide contracts for verification) and including but not limited to other fees that may be required prior to final plat approval.
- Maintenance Bond for City Improvements, 2 year – 10% Bond to be verified by submitting contract.
- Construction as-built record drawings (mylar)
- Engineering construction test reports.
- Walk-through with Public Works personnel completed with satisfactory outcome.
- HOA (covenants, conditions & restrictions) documentation approved by City Attorney before submittal to Planning & Zoning.

By signing this application, staff is granted access to your property to perform work related to your case. I waive the statutory time limits in accordance with Section 212 of the Texas Local Government Code.

STATE OF TEXAS ( )

COUNTY OF COLLIN ( )

BEFORE ME, a Notary Public, on this day personally appeared _____the undersigned applicant, who, under oath, stated the following: "I hereby certify that I am the owner, or duly authorized agent of the owner, (**proof must be attached, e.g. "Power of Attorney**) for the purposes of this application; that all information submitted herein is true and correct. I understand that submitting this application does not constitute approval, and incomplete applications will result in delays and possible denial."

_____

Owner / Agent *(circle one)*

[Notary seal]

SUBSCRIBED AND SWORN TO before me, this the _____ day of _____, _____.

Notary Public in and for the State of Texas: _____

Official Use Only: **Action Taken**

Planning & Zoning: _____**Date:** _____

City Council: _____ **Date:** _____

Applicant Withdrew: Yes or No **Applicant Made a Written Withdrawal: Yes or No** **Date:** _____

PRELIMINARY AND FINAL PLAT
Application Guide & Checklist

IMPORTANT NOTE

Applicants are **required** to schedule a **pre-application meeting** with the Community Development Department to discuss the development review/approval process and proposed plans with city staff. Application review submittal deadlines are **5 pm on the Thursday preceding the Wednesday DRC meeting.**

PLAT APPLICATION

The City is concerned about the time, expense and efforts you and City staff have or will put into your project. The checklists herein are provided to expedite the project review process, and to provide clear understanding as to what will be required, and what will be expected and evaluated. City staff is bound by City ordinance and State law regarding publishing of notices, mail-outs, etc. that will have an effect upon when your project will be heard by the approval body, which can only occur when the Plat Application and Plat are complete in all detail.

Please read the applicable checklist carefully. It is to be completed for all projects and, along with the associated Plat, is required to be complete in all details prior to acknowledgement by the City that the respective Plat is ready to proceed for approval. A Plat is considered filed with the City on the date of the hearing by the Planning and Zoning Commission or, if subject to administrative approval, when the Plat has been determined to meet all requirements. Instructions for completion are included with each checklist. Development regulations may be reviewed on the City's web site www.lucastexas.us.

The City has made every effort to evaluate historical plans and approvals to make sure that the checklist addresses all details needed on a Plan. Recognizing that no two projects sites are the same, and that Consultant's vary in their abilities, determination, experience, and quality control processes, the City may require that a plan or an element of the plan be redone, or that information not specifically addressed on the checklist be provided for a smoother review and approval process.

It is recognized that there most often will be changes needed from what is initially submitted to the City for review. City staff conscientiously examines each item on a checklist to see if the item was sufficiently addressed according to City requirements. Where deficiencies are found, the Plat will be marked up and returned to the contact person named on the application to be addressed prior to further review or acceptance.

IMPORTANT NOTICE

Due to recent legislation enacted by the 79th Texas legislature in 2005, the City is required to treat any original application, development plan or plat application as a formal permit application if the submittal gives the City fair notice of the proposed project and hence, according to Chapter 245 of the Texas Local Government Code, the City will treat such as a formal permit application as that term is defined under that Chapter and Ordinance No. 29-05. Once a permit application is received, the City will furnish a response to the applicant within 10 business days from the date of submittal to provide comments as to any deficiencies in the submittal. The applicant shall be given a total number of 45 days, commencing from the initial date of submittal, to make all corrections as noted, to provide a complete set of plans meeting submission requirements, and to correct any deficiencies. Failure of a resubmittal to meet all check list, ordinance and submission requirements upon the expiration of the 45-day period will result in the closure the file; the case shall become null and void, and the permit shall be deemed to be expired. Any further submittal will be treated as a new case and subject to existing requirements, together with required fees.

PLAT SUBMISSION REQUIREMENTS

1st or initial submittal:

- 2 (two)-24”x36” folded (approximately 8” x 12”) copies of each Plan herein
- An electronic copy of the Plat and/or Exhibits in pdf format.
- 6 (six) 11” x 17” hardcopy reductions
- The completed checklist
- A completed application
- A letter requesting any variance, exception or modification to a regulation, or why an issue was not addressed
- A fee as required herein

2nd and 3rd submittals to address requirements:

- Highlight questions asked by DRC committee in bold.
- Provide response/correction directly below DRC question.
- 2 (two) 24”x36” folded copies of each Plat requiring corrections
- An electronic copy of the corrected Plat and/or Exhibits in pdf format.
- 6 (six) 11” x 17” hardcopy reductions

4th and subsequent submittal(s):

- 2 (two)-24”x36” folded (approximately 8” x 12”) copies with required corrections.
- An electronic copy of the Plat and/or Exhibits in pdf format.
- 6 (six) 11” x 17” hardcopy reductions
- A fee equal to the original submission fee

When staff has determined the application is complete and accepted for final approval

- 30 (thirty) -24”x36” folded copies of Zoning Concept Plan and any/all other required Plan Exhibits
- 4 (twenty-four) -11”x17” Z folded copies.
- An electronic copy of the Plat and/or Exhibits in pdf format.
- Any changes made after Planning & Zoning review and before City Council review will require:
    - 15 – (fifteen) 24”x36” copies of each Plan, folded to approximately 8” x 12”
    - 4 (four) 11” x 17” or “12 x 18” reductions of each plan Tri or Z – folded.
    - An electronic copy of all Plans in pdf. format.

PLEASE REFER TO CITY OF LUCAS CODE OF ORDINANCE SEC.10.03.037 FOR FURTHER CLARIFICATION:

NOTES:

If a Facilities Agreement is required, such shall be approved by the City Council, and should be coordinated through the Department of Public Works – 972-912-1207.

Please note the signature requirements for Final Plats regarding mortgage holders, etc. At the submission of the approved Final Plat, prior to release of the Final Plat for filing with the respective County, the City shall require the following:

1. A certified copy of the Deed or Deed of Trust on file at the County Clerk’s office, showing the owner of the property and, as applicable, the lien or mortgage holder(s) of the property to be platted. If the property was recently purchased and a copy of the Deed or Deed of Trust is not on file with the respective County, a signed and notarized copy of the Deed or Deed of Trust; and
2. A notarized Title Certificate issued within 14 days of Final Plat approval.

PRELIMINARY PLAT MINIMUM REQUIREMENTS CHECK LIST

Project Name_____ Preparer _____

This checklist is provided to assist you in addressing the minimum requirements for Preliminary Plat submission. Confirm that all information is included on the submitted plans by checking the box next to the required information. **Checking the box certifies to the City that you have completely and accurately addressed the issue**. **This completed form must be returned at the time of application submittal**.

If an exception or modification to the regulations is requested, the reason and/or request for each shall be provided both directly on the plan and on a separate sheet on letterhead with sufficient details as to allow a determination by the appropriate approving body. Additional information may be required. Reference the specific requirement.

Plans are to be submitted complete in all detail as shown by the checklist. Should plans be determined to be incomplete, they may either be returned to the applicant without further review or marked up with needed changes.

If a Preliminary Plat is required, a Tree Survey/Preservation Plan is also required as part of the submittal requirements with and at the time of Preliminary Plat submittal. Refer to the Development Plan Application packet for the needed application and checklist.

- — I have made the decision NOT to waive the statutory time limits (30 days) in accordance with section 212 of the Texas Local Government Code. I understand and acknowledge that the City may DENY my Plat Application if not complete as determined by staff within the 30-day time period.
- — The required number of copies of the preliminary plat and the approved engineering and construction plans for all public infrastructure improvements in accordance with the design standards of the City, to include all streets, water mains and services, sewer system and services, and drainage systems required to develop the proposed subdivision.
- — The name, address and telephone number of the owner, the surveyor, and engineer responsible for the preparation of the final plat.
- — The name of the Subdivision, Vicinity Location Map showing adjacent subdivisions, street names (which shall conform, whenever possible, to existing street names and be approved by the Post Office) and lot and blocks numbers in accordance with a systematic arrangement.
- — An accurate boundary survey description of the property, with bearings and distances, referenced to survey lines, existing property descriptions and established subdivisions, and showing the lines of adjacent tracts, the layout, dimensions and names of adjacent streets and alleys and lot lines shown in dashed lines.
- — Existing boundary of adjacent street, and alley rights-of-way and boundaries of right-of-way (ROW) dedication are indicated, street names are labeled, and ROW widths are dimensioned.
- — Scale, north point, date, lot and block numbers.
- — The name and location of adjacent subdivisions or unplatted tracts drawn to scale shown in dotted lines and in sufficient detail to accurately show the existing streets, alleys and other features that may influence the layout and development of the propose subdivision. The abstract name and number, and name of the owner of the adjacent unplatted tracts should be shown.
- — Exact location of lots, streets, public highways, alleys, parks and other features, with accurate dimensions in feet and decimal fractions of feet, with the length of radii and of arcs of all curves, internal angles, points of curvatures, length and bearings of the tangents, and with all other surveyor information necessary to reproduce the plat on the ground. Dimensions shall be shown from all angle points.

- All lots on building sites shall conform to the minimum standards for area, width and depth prescribed by the zoning district or districts in which the subdivision is located, and state the area size of each lot. Internal lot lines are clearly indicated, shown to scale, and labeled with bearings and distances.
- Building setback lines and the location of utility easements.
- Topographic information showing contour lines with intervals up to one (1') foot indicating the terrain, the drainage pattern of the area, and the drainage basin areas **within** the proposed subdivision. Topographic information showing contour lines with intervals up to two (2) feet indicating the terrain, the drainage pattern of the area, and the drainage basin areas **outside** the boundaries of the proposed subdivision.
- The layout and dimensions of proposed storm drainage areas, easements and rights-of-way necessary for drainage within and outside the boundaries of the proposed subdivision.
- The location and purpose of all proposed parks or other areas offered for dedication to public use.
- The location of all existing property lines, buildings, sewer or water mains, storm drainage areas, water and wastewater facilities, fire hydrants, gas mains or other underground structures, easements of record or other existing features.
- The location, size and identification of any physical features of the property, including water courses, ravines, bridges, culverts, existing structures, drainage or other significant topographic features located on the property or within one hundred fifty feet (150') of the proposed subdivision.
- Copy of any deed restrictions, restrictive covenants, special use permit or planned development district ordinance regulating the property.
- The angle of intersection of the centerlines of all intersecting streets which are intended to be less than ninety (90°) degrees.
- In accordance with the city floodplain management regulations, of the Code of Ordinances, as amended, the floodplain and floodway lines and base flood elevations as shown on the current effective flood insurance rate maps for the city shall be shown, where applicable. A notation shall be shown on the face of the preliminary plat stating: "Lots or portions of lots within the floodplain or areas of special flood hazard require a development permit prior to issuance of a building permit or commencement of construction including site grading, on all or part of those lots".
- Floodplain and floodway lines and Base Flood Elevations as shown on the current effective Flood Insurance Rate Maps for the City should be shown, where applicable.
- For a preliminary plat of land located outside the city limits where sanitary sewer does not exist or where street improvement standards vary from those specified by the city, such differences shall be noted.
- A certificate of ownership and dedication of all streets, alleys, easements, parks and other land intended for public use, signed and acknowledged before a Notary Public by the owner and lien holders of the property, along with complete and accurate metes and bounds description of the land subdivided and the property dedicated to public use.
- Receipt showing all taxes on the subject property are paid.
- Certification by a surveyor, to the effect that the Preliminary Plat represents a survey made by the Surveyor, and that all the necessary survey monuments are correctly shown thereon.
- A Preliminary Plat, provided in multiple sheets shall include a key map showing the entire subdivision at smaller scale with lot and block numbers and street names on one (1) of the sheets or on a separate sheet of the same size.
- Copy of any proposed property owner or homeowners' association agreements, covenants and restrictions.
- Front and exterior side or corner setback lines are shown and labeled.
- Abstract lines, survey lines, county lines, school ISD boundary and corporate boundaries are shown and clearly labeled.
- A title block is provided in the lower right corner that includes large, boldly printed:

(SUBDIVISION NAME)
PRELIMINARY PLAT
LOT(S) _____, BLOCK(S) _____
(survey, abstract and tract number)

If a replat, include:

REPLAT OF LOT(S) _____, BLOCK(S) _____

- A log of submittal/revision dates since submitted to the City.
- The purpose of a Replat or Amending Plat is stated on the face of the plat document.
- If the proposal is a replat or amending plat, the existing lot numbers and block numbers or letters are shown as light dotted lines, with lot number designation followed by R for Replats or an A for Amending Plats.
- Location of property lines, owner or subdivision name(s) and recording information of abutting properties is indicated. Unplatted property or any streets or alleys within a 500-ft radius of subject property are shown and identified/labeled as appropriate.
- Medians, median openings; turn lanes, deceleration/acceleration lanes and stacking distance is indicated within 200 feet of the property. The entire median, left-turn lane and/or deceleration lane and median opening serving a site is shown.
- Each lot is dimensioned and the square footage of each lot is indicated.
- Each lot is numbered and block groups are assigned a letter. Homeowner's Association and other open space areas are identified with tract number.
- The location of existing underground and above ground utilities, flood plain boundaries and state or federally protected areas, such as wetlands, are indicated.
- The location of existing structures or other features proposed to remain and those proposed for removal.
- Existing easements are indicated by a light, dashed line and labeled indicating dimension, purpose and County recording information.
- Location, dimension, and purpose of proposed easements are indicated by a medium-weight, dashed line. Required and proposed ingress/egress or access easements are shown, clearly labeled and tied down, as appropriate.
- Existing zoning is shown.
- Location and area of parks, drainage ways, creeks and open space is indicated and labeled.
- Legal description/metes and bounds description is included.
- Include any notes required by the various affected agencies/utilities.
- Residential minor streets shall be designed and platted so that no street segment shall have a straight line for more than 1,000 feet before altering its course by at least 20 degrees.
- Sites to be reserved or dedicated for parks, playgrounds and/or other public uses are indicated and labeled.
- Preliminary water plans are included with this submittal.
- Contours are indicated with intervals of two (2) feet for property five acres or less and five (5) feet for property more than five acres.
- A note is included that states whether or not the property is in the 100-year flood plain, with the FIRM Community Panel reference number and map date.
- A note shall be added to the plat stating:

"Preliminary Plat - For Inspection Purposes Only."

PLACE THE FOLLOWING ON ALL PLATS:

Requiring Planning and Zoning Commission Approval:

CITY APPROVAL CERTIFICATE

- ✓ This plat is hereby approved by the Planning and Zoning Commission of the City of Lucas, Texas

  _____ _____
  Chairman, Planning and Zoning Commission Date

  ATTEST:
  _____ _____
  Signature Date
  _____
  Name & Title

- ✓ The Director of Public Works of the City of Lucas, Texas hereby certifies that to the best of his/her knowledge or belief, this subdivision plat conforms to all requirements of the Code of Ordinances and with engineering construction standards and processes adopted by the City of Lucas, Texas as to which his/her approval is required.

  _____ _____
  Director of Public Works Date

- ✓ The Director of Planning and Community Development of the City of Lucas, Texas hereby certifies that to the best of his/her knowledge or belief, this subdivision plat conforms to all requirements of the Code of Ordinances, or as may have been amended or modified, as allowed, by the Planning and Zoning Commission as to which his/her approval is required.

  _____ _____ ____
  Director of Planning and Community Development Date

SURVEYOR'S CERTIFICATION

- ✓ KNOW ALL MEN BY THESE PRESENTS:
  That I, _____, do hereby certify, that I prepared this plat from an actual on the ground survey of the land as described and that the corner monuments shown thereon were properly placed under my personal supervision in accordance with the Platting Rules and Regulations of the City of Lucas Planning and Zoning Commission.

  _____
  Registered Professional Surveyor
  STATE OF TEXAS §
  COUNTY OF *DALLAS* §
  Before me, the undersigned authority, a Notary Public in and for said County and State, on this day personally appeared _____, known to me to be the person whose name is subscribed to the foregoing instrument and acknowledged to me that he/she executed the same for the purpose and considerations therein expressed.
  Given under my hand and seal of office, this _____ day of _____, 200__.

  _____
  Notary Public in and for
  the State of Texas

For Minor Plats/ Subdivisions
Approved by Director of Planning and Community Development:

CITY APPROVAL CERTIFICATE

This plat is hereby approved by the Director of Planning and Community Development of the City of Lucas, Texas, in accordance with the Lucas Development Code, Review & Approval Procedures.

_____ _____

Director of Planning and Community Development Date

ATTEST:

_____ _____

Signature Date

_____

Print Name & Title

The Director of Public Works of the City of Lucas, Texas hereby certifies that to the best of his/her knowledge or belief, this subdivision plat conforms to all requirements of the Lucas Development Code and with engineering construction standards and processes adopted by the City of Lucas, Texas as to which his approval is required.

_____ _____

Director of Public Works Date

FINAL PLAT MINIMUM REQUIREMENTS
CHECK LIST

Project Name_____ **Preparer** _____

This checklist is provided to assist you in addressing the minimum requirements for Final Plat submission. An application is incomplete unless all applicable information noted below is submitted to the Department of Planning and Community Development. Confirm that all information is included on the submitted plans by checking the box next to the required information. **Checking the box certifies to the City that you have completely and accurately addressed the issue**. This completed form must be returned at the time of application submittal.

If an exception or modification to the regulations is requested, the reason and/or request for each shall be provided on a separate sheet on letterhead with sufficient details as to allow a determination by the appropriate approving body. Additional information may be required. Reference the specific requirement. All exception/modification requests must also be specifically listed on the plan/s.

Plans are expected to be submitted complete in all detail as included by the checklist. Should plans be determined to be incomplete, they may either be returned to the applicant without further review or marked up with needed changes.

If a Preliminary Plat was not required, a Tree Survey/Preservation Plan is required as part of the submittal requirements with and at the time of submittal of the Final Plat. Refer to the Development Plan Application for the needed application and checklist.

Included

- ___ All information required for a Preliminary Plat.
- ___ Record drawings, construction plans including one set of mylars and a digital copy in DWG or DGN format, and two sets of bluelines, where applicable.
- ___ All information required for a preliminary plat.
- ___ The improvement agreement and security if required, in a form satisfactory to the city attorney and in an amount established by the city council upon recommendation of the city engineer and shall include a provision that the owner shall comply with all the terms of the final plat approval as determined by the commission.
- ___ Formal irrevocable offers of dedication to the public of all streets, alleys, utilities, easements and parks in a form approved by the city attorney.
- ___ An owner may, at the discretion of the commission, obtain approval of a phase of a subdivision for which a preliminary plat was approved provided such phase meets all the requirements of this article in the same manner as is required for a complete subdivision.
- ___ If applicable, copy of agreements, covenants and restrictions establishing and creating the homeowners' association approved by the commission based on recommendation of the city attorney.
- ___ I have made the decision NOT to waive the statutory time limits (30 days) in accordance with section 212 of the Texas Local Government Code. I understand and acknowledge that the City may DENY my Plat Application if not complete as determined by staff within the 30-day time period.
- ___ Location map clearly showing the location of the proposed Final Plat with cross streets is included. Indicate scale or not to scale (NTS) and provide north arrow.
- ___ Written and bar graph scale and north arrow are indicated. North shall be oriented to the top or left side of the sheet.
- ___ Abstract lines, survey lines, corporate boundaries are shown and clearly labeled.
- ___ A title block is provided in the lower right corner that includes large, boldly printed

(SUBDIVISION NAME)
FINAL PLAT (or REPLAT, AMENDING PLAT, MINOR PLAT as applicable)
LOT(S) _____, BLOCK(S) _____
(survey, abstract and tract number)
If a replat, include:
REPLAT OF LOT(S) _____, BLOCK(S) _____

- The owner and surveyor's names, addresses and phone numbers, gross and net areas as applicable, submission date, and a log of submittal/revision dates since submitted to the City.
- Location of property lines, owner or subdivision name(s) and recording information of abutting properties is shown.
- Abutting properties are indicated by a light solid line.
- Existing boundary of street rights-of-way adjacent to the property and boundaries of right-of-way dedication are indicated by a medium weight solid line, intermittent with two dashed lines, and widths are dimensioned.
- Existing and proposed internal alleys and streets ROW are indicated by a medium weight solid line, intermittent with two dashed lines.
- Streets are named and ROW dimensioned.
- Streets and alleys ROW within 200 feet of the subject property boundary are accurately located, dimensioned, and named/labeled.
- Residential minor streets shall be designed and platted so that no street segment shall have a straight line for more than 1,000 feet before altering its course by at least 20 degrees.
- The length and bearing of all straight lines, radii, arc lengths, tangent length and central angles of all curves are indicated along the lines of each lot. The curve data pertaining to block or lot boundary may be placed in a curve table at the base of the plat and prepared in a tabular form with the following information:
    - a. Curve number
    - b. Delta
    - c. Radius
    - d. Tangent length
    - e. Tangent offset
    - f. Arc length
    - g. Chord
- The description and location of all survey monuments placed in the subdivision or immediately adjacent to it are shown.
- In all subdivisions, corners are established at the corner of each block in the subdivision consisting of an iron rod or pipe not less than three-quarter inches (3/4") in diameter and twenty-four inches (24") deep, flush with the top of the sidewalk or other paving, surface, etc. All lot corners shall be installed prior to the final inspection of the subdivision.
- Lot corner monuments are placed at all lot corners except corners which are also block corners, consisting of iron rods or pipes of a diameter of not less than one-half inch (1/2") and eighteen inches (18") deep set flush with the top of the sidewalk. All lot corners shall be installed prior to the final inspection of the subdivision.
- Curve point markers are established using the same specifications as lot corners. All lot corners shall be installed prior to the final inspection of the subdivision.
- Internal lot lines are clearly indicated and shown to scale.
- Each lot is dimensioned with bearings and distances, as applicable, and the square footage of each lot is indicated.
- Each lot is numbered and block groups are assigned a letter.
- The location of flood plain boundaries and state or federally protected areas, such as wetlands, are indicated.
- Existing easements are indicated by a light, dashed line and labeled indicating dimension, purpose, and County recording information.
- Proposed easements are indicated by a medium weight, dashed line and labeled indicating dimension and purpose.

— Required cross access or ingress/egress easements are shown, dimensioned, labeled, and properly tied down.
— Existing zoning of the subject property is indicated.
— Location and area of parks, drainage ways, and open space is indicated. Open space/Homeowner's Association (HOA) areas are to be labeled with tract number/s.
— A legal description/metes and bounds description is included.
— Include any notes required by the various affected agencies/utilities.
— Sites to be reserved or dedicated for parks, playgrounds and/or other private or public use are indicated.
— A note is included that states whether or not the property is in the 100-year flood plain, with the F.I.R.M. Community Panel reference number and map date indicated.
— Applicable notes have been added to the plat. Any change from the wording shown herein shall be approved by the City of Lucas.
— The Improvement Agreement and security, if required, in a form satisfactory to the City Attorney and in an amount established by the City Council upon recommendation of the City Engineer and should include a provision that the owner will comply with all the terms of the Final Plat approval as determined by the Commission.
— At the discretion of the Commission, obtain approval of a phase of a subdivision for which a Preliminary Plat was approved provided such phase meets all the requirements of the subdivision ordinance.
— Copy of agreements, covenants and restrictions establishing and creating the homeowners' association approved by the Commission based on recommendation of the City Attorney. (if applicable)
— The purpose of a Replat or Amending Plat is specifically noted on the face of the drawing.
— Homeowner Association Covenants, Conditions, and Restrictions (CCR's) are submitted for review and include statements for perpetual maintenance and provisions for maintenance by City of Lucas should the Homeowner's Association (HOA) dissolve.

— The Improvement Agreement and security, if required, in a form satisfactory to the City Attorney and in an amount established by the City Council upon recommendation of the City Engineer and should include a provision that the owner will comply with all the terms of the Final Plat approval as determined by the Commission.
— The following certificates shall be placed on the final plat in a manner that will allow them to be clearly visible on the final plat.

APPROVED BY THE PLANNING AND ZONING COMMISSION OF THE CITY OF LUCAS, TEXAS, ON THE ____ DAY OF_____ , _____ .
ATTEST:

_____
Chairperson, Planning and Zoning Commission

_____
Zoning Secretary

"Approved for Preparation of Final Plat"

_____
Chairman, City of Lucas, Planning and Zoning Commission — Date

_____
Director of Planning and Community Development — Date

_____
Director of Public Works — Date

PLACE THE FOLLOWING ON FINAL PLATS AS APPLICABLE:

SAMPLE OWNER'S CERTIFICATE
(If no homeowners' association in involved)

STATE OF TEXAS §
COUNTY OF COLLIN §
WHEREAS, John Doe and Joe Dokes are the Owners of a tract of land situated in the J. Foreman Survey, Abstract No. 483, Dallas County, Texas and being out of a 40 acre tract conveyed to them by Joe Smith and Tom Smith and a 0.54 acre tract conveyed to them by Jim Henry and being more particularly described as follows:

(Enter accurate property description here)

NOW THEREFORE, KNOW ALL MEN BY THESE PRESENTS:
That I/we, *John Doe, Joe Dokes*, Owners, do hereby bind themselves and their heirs, assignees and successors of title this plat designating the hereinabove described property as *New Town Estates*, an addition to the City of Lucas, and do hereby dedicate to the public use forever the streets, alleys, and right-of-way easements shown thereon, and do hereby reserve the easement strips shown on this plat for the mutual use and accommodation of garbage collection agencies and all public utilities desiring to use or using same. Any public utility shall have the right to remove and keep removed all or part of any buildings, fences, trees, shrubs, or other improvements or growths that in any way endanger or interfere with the construction, maintenance or efficiency of its respective systems on any of these easements strips, and any public utility shall at all times have the right of ingress and egress to and from and upon the said easement strips for the purpose of constructing, reconstructing, inspecting, patrolling, without the necessity at any time of procuring the permission of anyone. Additionally, *I/we* certify that *I/we* (*indicate correct options*) are the sole owners of the dedicated property and that no other's interest are attached to this property unless otherwise indicated on the required Mortgage Holder Certification that is included on this plat. This plat approved subject to all platting ordinances, rules, regulations and resolutions of the City of Lucas, Texas.
Witness our hands at *LUCAS*, Texas, this _____ day of _____, 200__.

_____ _____
Joe Dokes, Owner *John Doe*, Owner

STATE OF TEXAS §
COUNTY OF COLLIN §
Before me, the undersigned authority, a Notary Public in and for said County and State, on this day personally appeared *John Doe and Joe Dokes*, Owners, known to me to be the persons whose names are subscribed to the foregoing instrument and acknowledged to me that they each executed the same for the purpose and considerations therein expressed.
Given under my hand and seal of office, this _____ day of _____, 200___.

_____
Notary Public in and for
the State of Texas

MORTGAGE HOLDER CERTIFICATION
(If no homeowners' association in involved)

That I,_____ , hold a mortgage or represent holders of a mortgage on the described property herein, do hereby consent to the submission and filing of this plat designating the hereinabove described property as *New Town Estates*, an addition to the City of Lucas and do hereby dedicate to the public use forever the streets, alleys, and right-of-way easements shown thereon and do hereby reserve the easements shown on this plat for the mutual use and accommodation of garbage collection agencies, public utilities desiring to use or using same and fire and access easements. Any public utility shall have the right to remove and keep removed all or part of any buildings, fences, trees, shrubs, or other improvements or growths which in any way endanger or interfere with the construction, maintenance or efficiency of its respective systems on any of these easements and any public utility shall at all times have the right of ingress and egress to and from and upon the said easement strips for the purpose of constructing, reconstructing, inspecting, patrolling, without the necessity at any time of procuring the permission of anyone. This plat approved subject to all platting ordinances, rules, regulations and resolutions of the City of Lucas, Texas.
Witness our hands at, Texas, this _____ day of _____, 200__.

_____
Signature

_____
Title

_____
Company
STATE OF TEXAS §

COUNTY OF COLLIN §
Before me, the undersigned authority, a Notary Public in and for said County and State, on this day personally appeared _____, known to me to be the person whose name is subscribed to the foregoing instrument and acknowledged to me that he/she executed the same for the purpose and considerations therein expressed.
Given under my hand and seal of office, this _____ day of _____, 200_____.

_____
Notary Public in and for the State of Texas

SAMPLE OWNER'S CERTIFICATE
(If a homeowners' association is involved)

STATE OF TEXAS §
COUNTY OF COLLIN §
WHEREAS, *John Doe and Joe Dokes* are the Owners of a tract of land situated in the *J. Foreman Survey, Abstract No. 483, Dallas* County, Texas and being out of a *40 acre tract conveyed to them by Joe Smith and Tom Smith* and a *0.54 acre tract conveyed to them by Jim Henry* and being more particularly described as follows: 15

(Enter accurate property description here)

NOW THEREFORE, KNOW ALL MEN BY THESE PRESENTS:
That I/we, *John Doe, Joe Dokes*, Owners, do hereby bind themselves and their heirs, assignees and successors of title this plat designating the hereinabove described property as *New Town Estates*, an addition to the City of Lucas, and do hereby dedicate to the public use forever the streets, alleys, and right-of-way easements shown thereon, and do hereby reserve the easement strips shown on this plat for the mutual use and accommodation of garbage collection agencies and all public utilities desiring to use or using same. Any public utility shall have the right to remove and keep removed all or part of any buildings, fences, trees, shrubs, or other improvements or growths that in any way endanger or interfere with the construction, maintenance or efficiency of its respective systems on any of these easements strips, and any public utility shall at all times have the right of ingress and egress to and from and upon the said easement strips for the purpose of constructing, reconstructing, inspecting, patrolling, without the necessity at any time of procuring the permission of anyone. Additionally, *I/we* certify that *I/we* are the sole owners of the dedicated property and that no other's interest is attached to this property unless otherwise indicated on the required Mortgage Holder Certification that is included on this plat.
Furthermore, as the owner of the property described herein, and in consideration of establishing the subdivision described herein, I/we agree to the following:

- Every owner of fee simple title to every individual lot within the subdivision shall be a member of the homeowners' association;
- The homeowners' association shall have the authority to collect membership fees;
- As applicable as it pertains to conditions shown herein, the homeowners' association shall be responsible for the maintenance of all common areas, screening walls, landscaped areas, private streets and alleys.
- The homeowners' association shall grant the City the right of access to any areas to abate any nuisances on such areas, and attach a lien upon each individual lot for the prorated costs of abatement.
- The homeowners' association shall indemnify and hold the City harmless from any and all costs, expenses, suits, demands, liabilities, damages, or otherwise, including attorney fees and costs of suit, in connection with the City's maintenance of common areas.
- The homeowners' association shall, where additional rights-of-way has been dedicated for the purpose of providing landscaping, additional areas for sidewalks, walls or other amenities, enter into a license agreement with the City and shall be responsible for the installation and maintenance of all landscape areas in the public rights-of-way.

This plat approved subject to all platting ordinances, rules, regulations and resolutions of the City of Lucas, Texas.

_____
Signature of Owner
STATE OF TEXAS §
COUNTY OF COLLIN §
Before me, the undersigned authority, a Notary Public in and for said County and State, on this day personally appeared *John Doe and Joe Dokes*, Owners, known to me to be the persons whose names are subscribed to the foregoing instrument and acknowledged to me that they each executed the same for the purpose and considerations therein expressed.
Given under my hand and seal of office, this _____ day of _____, 200____.

_____
Notary Public in and for
The State of Texas

MORTGAGE HOLDER CERTIFICATION
(If a homeowners' association is involved)

That I, _____, hold a mortgage or represent holders of a mortgage on the described property herein, do hereby consent to the submission and filing of this plat designating the hereinabove described property as *New Town Estates No. 2,* an addition to the City of Lucas and do hereby dedicate to the public use forever the streets, alleys, and right-of-way easements shown thereon and do hereby reserve the easement strips shown on this plat for the mutual use and accommodation of garbage collection agencies and all public utilities desiring to use or using same. Any public utility shall have the right to remove and keep removed all or part of any buildings, fences, trees, shrubs, or other improvements or growths which in any way endanger or interfere with the construction, maintenance or efficiency of its respective systems on any of these easements strips and any public utility shall at all times have the right of ingress and egress to and from and upon the said easement strips for the purpose of constructing, reconstructing, inspecting, patrolling, without the necessity at any time of procuring the permission of anyone. This plat approved subject to all platting ordinances, rules, regulations and resolutions of the City of Lucas, Texas, and to requirements placed on the homeowners' association as indicated herein and remedies to the abatement of nuisance and liens on properties therein and as required.

Witness our hands at, Texas, this _____ day of _____, 200__.

_____
Signature

_____
Title

_____
Company

STATE OF TEXAS §
COUNTY OF COLLIN §

Before me, the undersigned authority, a Notary Public in and for said County and State, on this day personally appeared _____, known to me to be the person whose name is subscribed to the foregoing instrument and acknowledged to me that he/she executed the same for the purpose and considerations therein expressed.

Given under my hand and seal of office, this _____ day of _____, 200____.

_____
Notary Public in and for
The State of Texas

City Filing Requirements:

- 3 (three)-24"x36" mylar with original seals and signatures, stamped with County recording information
- 4 (four) 11" x 17" black and white copies
- 1-Original tax certificate for the platted property
- Collin County Plat Recording Requirements (Verify with the Collin County Clerk at 972-542-4185) and applicable fees plus 15% administrative fee.

Lucas Code of Ordinances

Sec. 10.03.037 Procedure for preliminary plat

(e) Preliminary plats shall be distributed by city staff to city departments. The owner shall be responsible for the distribution of copies of the preliminary plats to the agencies listed below. The city staff shall give the owner and such agencies a specific date by which to return written responses. The owner and the agencies listed below shall be provided an opportunity to attend a developer/city staff conference for the purpose of notifying the developer of necessary corrections.

(1) Independent school districts affected by the plat (one copy).

(2) City utility departments (two copies).

(3) Public utility companies and franchise utility companies that serve or will provide service to the proposed subdivision (two copies).

(4) County commissioner and county public works director if the subdivision is outside the city limits (one copy each).

Dear Land Owner,

Below is a list of contacts compiled to help you comply with the City of Lucas Code of Ordinance, Sec. 10.03.037. This list was compiled only as a guide, proof of compliance falls with you, the owner.

(1) Independent school districts affected by the plat (one copy).

I. **Allen ISD:**
Tim Carroll - Director of Public Information
972-727-0510 ext. 217
tim_carroll@allenisd.org
601 E. Main Street
Allen, TX 75002

II. **Lovejoy ISD:**
Dennis Womack – Director of Communication
469-742-8017
Dennis_womack@lovejoyisd.net
259 Country Club Road
Allen, TX 75002

III. **McKinney ISD:**
Nancy James – Assistant Superintendent for Support Services
469-742-4113
nsjames@mckinneyisd.net
1 Duvall Street
McKinney, TX 75069

IV. **Plano ISD:**
Steve Fortenberry – Chief Financial Officer, Business Services
469-752-8023
steve.fortenberry@pisd.edu
2700 W. 15th Street
Plano, TX 75075

Pam Moreland - Administrative Assistant-Student Records
469-752-8080
pam.moreland@pisd.edu
2700 W. 15th Street
Plano, TX 75075

V. **Princeton ISD:**
Phillip Anthony – Superintendent
469-952-5400
panthony@princetonisd.net
321 Panther Parkway
Princeton, TX 75407

VI. **Wylie ISD:**
Ian Halperin – Director of Communications & Community Relations
972-429-3019
ian.halperin@wylieisd.net
P.O. Box 490
Wylie, TX 75098

(2) City utility departments (two copies).

Facilitated by City of Lucas Staff

(3) Public utility companies and franchise utility companies that serve or will provide service to the proposed subdivision (two copies).

Grayson-Collin Electric:
Michael Lauer – Project Manager & Manager of Economic Development
903-482-7183
Michael.lauer@grayson-collin.coop
P.O. Box 548

Van Alstyne, TX 75495

TXU Energy:
Brian Neitzel – Director of Real Estate & Development
214-812-4600
frianneitzel@txu.com
1601 Bryan Street
Dallas, TX 75201

North Texas Municipal Water District
Bobby Schalf – Assistant Planning Officer
Phone (Local): 972-442-5405
Fax: 972-295-6440
bschalf@ntmwd.com
505 East Brown Street
Wylie, TX 75098

Co-Serve
Lance Ehler – Business Developer Manager
Phone: 940-321-7862
Fax: 940-321-7814
lehler@coserv.com
7701 South Stemmons
Corinth, TX 76210-1842

Oncor
Steve Elk – Area Manager
Phone: 972-569-1205
Fax: 972-569-1299
Steven.elk@oncor.com
4600 State HWY 121
Mckinney, TX 75070

(4) County commissioner and county public works director if the subdivision is outside the city limits (one copy each).

Phyllis Cole – Collin County Commissioner
Phone: 972-424-1460 ext. 4628
Fax: 972-548-4699
pcole@collincountytx.gov
Collin County Government Center
210 S. McDonald St.

Suite 626
McKinney, TX 75069

Jon Kleinheksel - Collin County Public Works
Phone (Local): 972-548-3700
Phone (Metro): 972-424-1460 ext. 3700
Fax: 972-548-3754
pubworks@collincountytx.gov
700 A. Wilmeth Rd
McKinney, TX 75069

Tracy Homfeld - Collin County Engineering
Phone (Local): 972-548-3733
Phone (Metro): 972-424-1460 ext. 3733
Fax: 972-548-5555
thomfeld@collincountytx.gov
825 North McDonald Street
Suite 160
McKinney, TX 75069

I have complied with Lucas City Ordinance Sec. 10.03.037

_____
Development Name

_____
Agents Signature Date

_____
Notary Date

Concept Plan
(Optional Land Study)
Minimum Requirements

Project Name_____ **Preparer**_____

This checklist is provided to assist you in addressing the minimum requirements for **Optional Land Study** submission. An application is incomplete unless all applicable information noted below is submitted to the Department of Planning and Community Development. Confirm that all information is included on the submitted plans by checking the box next to the required information. **Checking the box certifies to the City that you have completely and accurately addressed the issue**. This completed form must be returned at the time of application submittal.

If an exception or modification to the regulations is requested, the reason and/or request for each shall be provided on a separate sheet on letterhead with sufficient details as to allow a determination by the appropriate approving body. Additional information may be required. Reference the specific requirement. All exception/modification requests must also be specifically listed on the plan/s.

Plans are expected to be submitted complete in all detail as included by the checklist. Should plans be determined to be incomplete, they may either be returned to the applicant without further review or marked up with needed changes.

Prior to submission of a preliminary plat and after meeting with the city staff, the owner may file an application for approval of an optional land study with the commission, which shall meet the following minimum requirements:

Application for the needed application and checklist.
Included

- — The application shall include all contiguous holdings of the owner with an indication of the portion which is proposed to be developed or offered, sold or leased, accompanied by an affidavit of ownership, which includes an address and telephone number of an agent.
- — The optional land study shall be drawn to scale of 1" = 100' or larger.
- — The lower right-hand corner of the optional land study shall contain a title block clearly showing the proposed name of the subdivision or addition, the name and address of the owner, engineer or surveyor responsible for the design or survey, the scale of the drawing, the date the drawing was prepared, and the location of the tract according to the abstract and survey records of the county.
- — The optional land study shall clearly show the limits of the tract and scale distances. True north shall be clearly indicated and shall be to the top or left of the study.
- — The optional land study shall show the names of adjacent subdivisions or additions or the name of record owners or [of] adjoining parcels of unplatted land.
- — The optional land study shall contain the existing zoning on adjoining land, the location, width, and names of all existing or platted streets or other public ways within or adjacent to the tract, existing permanent buildings, railroad rights-of-way, and topography with existing drainage channels or creeks, and other important features such as tree groupings, vegetation, political subdivisions or corporate limits and school district boundaries.
- — The optional land study shall show the layout, names and width of proposed streets, alleys and easements.

- The optional land study shall show a general arrangement of land uses including but not limited to park and school sites, municipal facilities, private open space, floodplains and drainage ways, phasing plan, and proposed nonresidential and residential uses and densities.
- The optional land study shall show layout, numbers, and approximate dimensions of proposed lots and all building lines.
- The optional land study shall show the location of proposed screening walls and/or other forms of screening shall be clearly indicated.
- The optional land study shall show existing contours of the tract in intervals of two feet or less, referred to sea level datum.
- The optional land study shall show existing sewers, water mains, culverts, or other underground structures within the tract and immediately adjacent thereto with pipe sizes and locations indicated.
- The optional land study shall show proposed water, sanitary sewer and storm sewer pipelines with culverts, bridges, and other appurtenances or structures shown.
- The optional land study shall show storm water retention or detention basins as required.
- The optional land study shall show erosion mitigation of lots or roads next to creeks and drainage ways according to drainage and erosion guidelines from the engineering department.
- Record drawings, construction plans including one set of mylars

OPTIONAL LAND STUDY

Office Use Only:
Date Received
Received by

Name of Subdivision and/or Project: _____

ITEMS SUBMITTED	Filing Fee
☐ **Preliminary Plat**	
▪ Single Family Residential Subdivision Development o $750 + $5 per acre with 20 acres or less (i.e. $850 for 20 acres) excluding minor plats of five (5) acres or less. o $750 + $5 per acre with 21-30 acres (i.e. $900 for 30 acres) o $800 + $5 acre with 31-45 acres (i.e. $1025 for 45 acres) o $900 + $5 per acre with 46+ acres (i.e. $1130 for 46 acres)	_____
▪ Estate Residential Subdivision Development o $1000 + $7 per acre for all size parcels (i.e. $1140 for 20 acres)	_____
▪ Minor Plats o $500 + $5 per acre with 5 acres or less (i.e. $525 for 5 acres)	_____
▪ Non-residential District Plats o $800 + $10 per acre with 30 acres or less o $850 + $10 per acre with 31 – 45 acres o $950 + $10 per acre with 46+ acres	_____
☐ **Final Plat**	
▪ Single Family Residential Subdivision Development o $800 + $5 per acre with 30 acres or less o $850 + $5 per acre with 31 – 45 acres o $950 + $5 per acre with 46+ acres *Any additional development fees will be charged at final plat rates.*	_____
▪ Estate residential Subdivision Development o $950 + $7 per lot for all size parcels	_____
▪ Minor Plat o $350 + $5 per acre with 5 acres or less	_____
▪ Non-residential District Plats o $850 + $10 per acre for up to 30 acres o $900 + $10 per acre with 31 – 45 acres o $1000 + $10 per acre with 46+ acres	_____
▪ Replat o Minor Plat (5 acres or less) $450 + $5 per acre ($475 for 5 acres) o All others - $600 + $10 per acre	_____
▪ Amended Plat o Minor Plats (5 acres or less) - $300 + $7 per acre (i.e. $300 for an amended plat for 5 acres) o All others - $500 + $10 per acre (i.e. $700 for an amended plat for 20 acres)	_____
☐ **Storm Water Run-Off Permit** o Developments 0 – 3 acres $75.00 o Developments 4 – 10 acres $150.00 o Developments 10 acres and above $500.00	_____
☐ **Vacation of Plat** o $500 + $10 per acre	_____
☐ **Concept Plan (Optional Land Study)** o $150 per session with Planning & Zoning and/or Council	_____
☐ **Tree Survey/Conservation Plan**	**N/A**
☐ **Tree Removal & Site Clearing Permit** o $ 250	_____
☐ **Park Site Dedication** o $ 1,000 per lot or land dedication per Lucas City Ordinance Sec. 10.01.122	_____

OPTIONAL LAND STUDY, cont.

Physical Location of Property: _____
(Address and General Location – approximate distance to nearest existing street corner)

Brief Legal Description of Property (must also attach accurate metes and bounds description):
_____
(Survey/Abstract No. and Tracts; or platted Subdivision Name with Lots/Block)

Comprehensive Zoning Designation/s: _____

Existing Zoning Designation/s: _____

Description of Project Uses: _____

Acreage: _____ Existing # of Lots/Tracts: _____

OWNER'S NAME: _____ Contact Phone: _____

Applicant/Contact Person: _____ Title: _____

Company Name: _____

Street/Mailing Address: _____

Phone: (_____) _____ Fax: (_____) _____ Email: _____

OWNER'S NAME: _____ Contact Phone: _____

Applicant/Contact Person: _____ Title: _____

Company Name: _____

Street/Mailing Address: _____

Phone: (_____) _____ Fax: (_____) _____ Email: _____

ENGINEER/REPRESENTATIVE': _____

Applicant/Contact Person: _____ Title: _____

Company Name: _____

Street/Mailing Address: _____

Phone: (_____) _____ Fax: (_____) _____ Email: _____

OPTIONAL LAND STUDY, cont.

Name of Subdivision or Project: _____ cont.

ALL APPLICATIONS MUST BE COMPLETE, ACCOMPANIED BY THE APPLICABLE CHECKLIST AND TAX CERTIFICATE SHOWING TAXES PAID, BEFORE THEY WILL BE SCHEDULED FOR P&Z AGENDA. It is the applicant's responsibility to be familiar with, and to comply with, all City submittal requirements (in the Zoning & Subdivision Ordinances, and any separate submittal policies, requirements and/or checklists that may be required from City staff), including the number of plans to be submitted, application fees, etc. Please contact City staff in advance for submittal requirements. [Drawings will not be returned to applicant.]

ALL PARCELS/PROPERTIES MUST MATCH IN ACREAGE ALL OTHER DOCUMENTS SUBMITTED WITH NO AMBIGUITY.

SUBMISSIONS: Failure to submit all materials to the City with this application will result in delays scheduling the agenda date.

NOTICE OF PUBLIC RECORDS: The submission of plans/drawings with this application makes such items public record, and the applicant understands that these items may be viewed by the general public. Unless the applicant expressly states otherwise in writing, submission of this application (with associated plans/drawings) will be considered consent by the applicant that the general public may view and/or reproduce (i.e., copy) such documents.

****READ BEFORE SIGNING BELOW:** If there should be more than one property owner complete a separate sheet with the same wording as below. The City requires all Original Signatures. If applicant is other than the property owner a "Power of Attorney" with original, notarized signatures are required. (Notaries are available)

ITEMS REQUIRED PRIOR TO FINAL PLAT APPROVAL:

- Applicant agrees to pay any and all monies due to the City including but not limited to Park Site fee, Tree Removal Permit fee, 3% of Construction cost (developer to provide contracts for verification) and including but not limited to other fees that may be required prior to final plat approval.
- Maintenance Bond for City Improvements, 2 year – 10% Bond to be verified by submitting contract.
- Construction as-built record drawings (mylar)
- Engineering construction test reports.
- Walk-through with Public Works personnel completed with satisfactory outcome.
- HOA (covenants, conditions & restrictions) documentation approved by City Attorney before submittal to Planning & Zoning.

By signing this application, staff is granted access to your property to perform work related to your case. I waive the statutory time limits in accordance with Section 212 of the Texas Local Government Code.

STATE OF TEXAS ( )

COUNTY OF COLLIN ( )

BEFORE ME, a Notary Public, on this day personally appeared _____the undersigned applicant, who, under oath, stated the following: "I hereby certify that I am the owner, or duly authorized agent of the owner, (**proof must be attached, e.g. "Power of Attorney**) for the purposes of this application; that all information submitted herein is true and correct. I understand that submitting this application does not constitute approval, and incomplete applications will result in delays and possible denial."

_____

Owner / Agent *(circle one)*

[Notary seal]

SUBSCRIBED AND SWORN TO before me, this the _____ day of _____, _____.

Notary Public in and for the State of Texas: _____

Official Use Only: **Action Taken**

Planning & Zoning: _____ **Date:** _____

City Council: _____ **Date:** _____

Applicant Withdrew: Yes or No **Applicant Made a Written Withdrawal: Yes or No** **Date:** _____